भारतीय मानक
Indian Standard

IS 16094 : 2018

हाईड्रोमीटरी — स्वचालित दाब ट्रांसडयूसर के प्रयोग द्वारा कुएं में जल स्तर मापन की पद्धतियाँ — मार्गदर्शी सिद्धाँत

Hydrometry — Measuring the Water Level in a Well Using Automated Pressure Transducer Methods — Guidelines

ICS 07.060

© BIS 2018

भारतीय मानक ब्यूरो
BUREAU OF INDIAN STANDARDS
मानक भवन, 9 बहादुरशाह ज़फर मार्ग, नई दिल्ली-110002
MANAK BHAVAN, 9 BAHADUR SHAH ZAFAR MARG
NEW DELHI-110002
www.bis.org.in www.standardsbis.in

December 2018 **Price Group 13**

Ground Water and Related Investigations Sectional Committee, WRD 03

FOREWORD

This Indian Standard was adopted by the Bureau of Indian Standards, after the draft finalized by the Ground Water and Related Investigations Sectional Committee had been approved by the Water Resources Division Council.

Submersible pressure transducers, developed in the early 1960s, have made the collection of water level and pressure data much more convenient than former methods. Submersible pressure transducers, when combined with electronic data recorders have made it possible to collect continuous or nearly continuous water level or pressure data from wells, piezometers, soil-moisture tensiometers, and surface water guages. These more frequent measurements have led to an improved understanding of the hydraulic processes in streams, soils, and aquifers.

In the formulation of this standard considerable assistance has been derived form ISO/TR 23211 : 2009 'Hydrometry — Measuring the water level in a well using automated pressure transducer methods'. It describes the operational theory behind submersible pressure transducers and provides information about their use in hydrologic investigations.

This standard also incorporates the salient features of digital water level recorders (DWLRs) for guidance which are not covered in ISO/TR 23211 : 2009.

This standard is intended to be a guide to the proper selection, installation, and operation of submersible pressure transducers and data loggers for the collection of hydrologic data, primarily for the collection of water level data from wells. This standard describes the basic principles, measurement needs, and considerations for operating submersible pressure transducers, including a discussion of the systematic errors inherent in their use. Standard operational procedures for data collection and data processing, as well as applications of transducers for specific types of hydrologic investigations are included. Basic concepts regarding the physics of pressure and the mechanics of measuring pressure are presented, along with information on the electronics used to make and record these measurements. Guidelines for transducer calibration, proper use, and quality assurance of data also are presented. Ground water field applications of pressure transducer systems are discussed, as are common problems that may corrupt data, and suggestions for field repairs.

For the purpose of deciding whether a particular requirement of this standard is complied with the final value, observed or calculated, expressing the result of a test or analysis, shall be rounded off in accordance with IS 2 : 1960 'Rules for rounding off numerical values (*revised*)'. The number of significant places retained in the rounded off value should be the same as that of the specified value in this standard.

Indian Standard

HYDROMETRY — MEASURING THE WATER LEVEL IN A WELL USING AUTOMATED PRESSURE TRANSDUCER METHODS — GUIDELINES

1 SCOPE

1.1 This standard provides information about the functional requirements of instrumentation for measuring the water level in a well using automated pressure transducer methods.

1.2 This standard provides guidance for the proper selection, installation and operation of submersible pressure transducers and data loggers for the collection of hydrologic data, primarily for the collection of water level data from wells. Basic principles, measurement needs and considerations for operating submersible pressure transducers are described and the systematic errors inherent in their use are discussed. Standard operational procedures for data collection and data processing, as well as applications of transducers for specific types of hydrologic investigations are included. Basic concepts regarding the physics of pressure and the mechanics of measuring pressure are presented, along with information on the electronics used to make and record these measurements. Guidelines for transducer calibration, proper use and quality assurance of data also are presented. Ground water field applications of pressure transducer systems are discussed, as are common problems that may corrupt data, along with suggestions for field repairs.

1.3 Annex A provides guidance on the types of pressure transducers commonly used for water level measurement and the measurement uncertainty associated with them.

2 REFERENCES

The standards given below contain provisions which through reference in this text, constitute provisions of this standard. At the time of publication, the editions indicated were valid. All standards are subject to revision, and parties to agreements based on this standard are encouraged to investigate the possibility of applying the most recent editions of these standards :

IS No.	*Title*
1191 : 2003	Hydrometric determination — Vocabulary and symbols (*second revision*)
15118 : 2002 /ISO 4373 : 1995	Measurement of liquid flow in open channel — Water level measuring devices

3 TERMS AND DEFINITIONS

For the purpose of this standard, the definitions given in IS 1191 shall apply.

4 APPLICATIONS OF THE USE OF PRESSURE TRANSDUCERS TO GROUND WATER RESOURCE INVESTIGATIONS

4.1 Ground Water Monitoring

Submersible pressure transducers can be used for long-term and short-term applications. This clause discusses both applications. In addition, in **4.4**, information is provided on the technique of reducing well-bore storage so that the user can apply this technique to reduce the effective diameter of wells during slug tests or aquifer tests.

4.2 Long-Term Monitoring

4.2.1 *General*

Many hydrologic investigations require continual monitoring (over periods of weeks to years) of water levels in wells. Examples of such studies include monitoring water levels for:

a) indication of earth tides,
b) indication of earthquakes,
c) determination of temporal variation in vertical or horizontal hydraulic gradients,
d) determination of timing and magnitude of recharge to ground water following precipitation events, and
e) monitoring of pump and treat operations at ground water reclamation sites.

For many studies, even if continual data collection is not necessary, it is cost effective to monitor water level fluctuations in wells with a sensor rather than using human resources to collect discrete measurements.

Submersible pressure transducers have long been used

for monitoring water level fluctuations in wells . Buried in the soil, these devices also have been used for decades to monitor pressure heads. Sensors used in this way have historically been called the Casagrande type pressure transducers, and are commonly used to monitor pressure heads in and around dams. While other automated water level sensor systems also can provide continual water level data in wells, submersible pressure transducers are particularly well suited for some applications. Typically small, and requiring little maintenance because they are immersed in water, their environmental conditions are relatively stable. Some examples of applications in which submersible pressure transducers are particularly well suited are listed in **4.2.2** to **4.2.10**.

4.2.2 *Pressure Range Considerations*

Submersible pressure transducers can be selected to monitor a small or large range of expected water level conditions. Transducers designed to measure a small pressure range can monitor stage changes of 3 m (10 ft) or less with a very high degree of resolution and accuracy. However, higher range pressure transducers can monitor water level changes on the order of 100 m (300 ft) with little loss of resolution or accuracy. Pressure transducers are well suited when large and sometimes rapid stage changes are expected, such as, monitoring head changes in Karst terrain, production wells, or pressure pulses associated with earthquakes.

4.2.3 *Non-vertical or Irregular Situations*

Submersible pressure transducers can be used in non-vertical or irregular wells when other systems cannot operate effectively. For a non-vertical well, a properly calibrated pressure transducer will indicate changes in vertical head in the well, requiring no adjustment to the data, whereas data from a float installed in the same well would require adjustment to compensate for the well's non-vertical orientation. Also, severe irregularities or deviations in the bore of a well could render acoustic-velocity devices or float mechanisms inoperative, while data from a pressure transducer would not be affected.

4.2.4 *Severe Environments*

Submersible pressure transducers are well suited for data collection in severe environmental conditions, such as, arctic or low-latitude desert climates. The relative stability of ground water temperature provides a much more suitable environment for submersible pressure transducers than for sensors that are mounted above ground or inside a well but above the water table. During freezing conditions, other types of sensors mounted to the top of a well can be disabled by freezing of water that has condensed on the sensor. Not only is the submersible pressure transducer usually not exposed to such extreme temperatures, if the water level in the well is shallow enough to freeze, the pressure transducer can continue to register pressure fluctuations below the ice lens. If ice were present in the well, an acoustic-velocity system or a float would indicate a constant water level. Relic ice lenses still frozen to the side of a well can hinder the operation of sensors.

4.2.5 *Flowing Wells*

In flowing artesian wells (wells with potentiometric heads above land surface), a submersible pressure transducer can provide potentiometric head data. This transducer is especially well suited to provide data when the potentiometric head fluctuates both above and below land surface. If potentiometric head rises to the point where a standpipe is impractical, or if heads frequently drop below land surface, a submersible pressure transducer may be the only practical option for providing continuous potentiometric head data.

4.2.6 *Large Depth-to-Water Considerations*

Wells with a depth-to-water greater than 100 m (300 ft) present special problems for most submersible pressure transducers. Cable or line stretch, thermal expansion, vent-tube blockage, and signal loss can introduce significant errors in deep wells or where sensors are located far from a logging device. It is noted that voltage problems caused by lead lengths of up to 1 500 m (5 000 ft), and blocked vent-tubes, led to problems when monitoring water level fluctuations in deep wells. Well-bore deviation, a problem common to deep wells, is magnified by the depth-to-water. Submersible pressure transducer models capable of making an analogue to digital conversion before transmitting the signal up the well to the data logger can overcome many of these problems.

4.2.7 *Small Diameter Situations*

To mitigate problems associated with hydraulic lag time, small diameter piezometers commonly are installed in wells drilled in geologic materials with low hydraulic conductivity. Although other types of sensors have been used for monitoring water level fluctuations in small diameter wells , most sensors are too large to fit inside wells with a diameter much smaller than about 2.54 cm (1 inch). Vibrating wire pressure transducers small enough to fit inside wells as small as 1.27 cm (0.5 inch) can provide reliable data when some other sensor types cannot.

4.2.8 *Marsh Installations*

Water levels in wells installed in easily compressed materials, such as, those in a salt marsh or a fen, can be altered by a person walking on the surface so that the water levels recorded during site visits are not representative of a site's long-term conditions. Frequently, these wells are of small diameter to

minimize hydraulic lag time associated with low hydraulic conductivity materials. Submersible pressure transducers have been used to provide unaltered hydraulic head data during intervals between site visits.

4.2.9 *Buried Installation*

Submersible pressure transducers have been used to monitor pore pressure at earth-filled dams and in slope-stability studies. Buried transducers can provide pore-pressure data without the aid of a well. Submersible pressure transducers were in sandbars to monitor pore-pressure fluctuations in response to significant stage changes of a river. The sensors were installed in areas where wells would not have been feasible because the river periodically inundated the sandbar.

4.2.10 *Multiple Zone Measurements*

Submersible pressure transducers are convenient when making multiple-zone pressure-head measurements in open boreholes containing packers that isolate intervals of the borehole. Transducers can be connected to threaded tubes that pass through the packers and register pressure head of isolated intervals without requiring the transducer to be located in those intervals. This type of connection can reduce complexity, borehole clutter and cost.

4.2.11 *Conclusion*

As shown in the previous discussion, submersible pressure transducers are well suited for many hydrologic applications, however, their use for long-term monitoring of water levels occasionally can lead to errors if data are not corroborated. The convenience and low maintenance of submersible pressure transducers can lead to long intervals between calibration checks and overconfidence in the reliability of the sensor's data. If checks on the calibration of sensors are not made, data may be erroneous to the point of leading to incorrect hydrologic interpretations. A study of vertical hydraulic head gradients at a well nest showed that uncorrected data from submersible pressure transducers resulted in an interpretation of reversals in vertical hydraulic head gradients when none actually occurred. Linear adjustment of data based on monthly check measurements would have led to the conclusion that additional water-table fluctuations of up to 0.052 m (0.17 ft) occurred when weekly check measurements indicated that sensor drift actually was responsible for those interpreted water level fluctuations.

Gauge pressure transducers usually are used to measure pressure in a water body open to the atmosphere, whereas absolute transducers usually are used as barometers and in sealed environments, such as, below packers. The user may wish to substitute absolute transducers for gauge transducers to eliminate the need for vented cable, especially to multiple transducers in close proximity, connected to one data logger. A barometer, which can be an identical inexpensive absolute transducer, also must be operated. When using an absolute transducer in a gauge transducer application, subtract the barometric record from the water level record to get submergence. Three redundant barometers can be used in conjunction with many absolute transducers measuring water levels. Because the adjusted record is the difference between two records, noise and drift that are not common to both transducers may increase by as much as a factor of two.

An absolute transducer can also be used instead of a gauge transducer to measure changes in wells in aquifers with barometric efficiencies close to 100 percent. After verifying that the barometric efficiency is indeed close to 100 percent, the original record from the absolute transducer is acceptable as the barometrically adjusted record.

4.3 Short-Term Monitoring

Submersible pressure transducers have been used extensively for monitoring water level fluctuations during single-well and multiple-well aquifer and slug tests. Before the use of automated sensors, aquifer tests were labour intensive, and early drawdown in the pumped well was not easily observed. Similarly, for single-well slug tests in sandy material, the early portion of the recovery commonly went unrecorded simply because it was not possible to get water level measurements that were only seconds apart. Using submersible pressure transducers has reduced labour costs and has provided the opportunity to collect data frequently during the early portion of aquifer and slug tests. When combined with a programmable data logger, the pressure transducer can supply data frequently during the early portion of the test and less frequently as the test progresses and the recovery rate slows. For clean, coarse sand, when the recovery of a slug test can be completed in less than half a minute, the fast response of many types of submersible pressure transducers can allow measurement with a sampling interval of half a second or less.

The pressure transducer used for aquifer tests should be capable of reliably measuring the expected range of water level fluctuations. For example, for an aquifer test, the pressure transducer in the pumped well should be capable of monitoring head changes much larger than is necessary for transducers installed in observation wells, where changes in water level are smaller and where greater accuracy may be desired. Similarly, for most single-well slug tests, a pressure transducer with a small pressure-sensitive range, such as, 0 to 34.5 kPa (0 to 5 psi) is adequate.

4.4 Reducing Well-Bore Storage

Due to the movement of water from the well into the formation, the water level in a well or piezometer can lag behind head changes in the geologic formation. Typical situations in which this well-bore storage effect is most significant include slug tests, early time in drawdown or recovery during an aquifer test, and wells in low-permeability materials. Only in slug or bailing tests, in which a slug or water is rapidly introduced into, or withdrawn from, the well is the effect of reducing well-bore storage undesirable. In fact, analysing the decay of the residual water level in a well to determine hydraulic conductivity is the purpose of a slug test.

Packers that seal parts of wells to prevent flow within the borehole or to isolate zones for special tests sometimes are used to minimize the effects of well-bore storage in aquifer tests. Well-bore storage is, in effect, an incremental slug test superimposed upon the water level fluctuation of interest during the test. An inexpensive packer that can be made in the field from materials from a hardware store or lumber yard (*see* Fig. 1) encloses the transducer and seals the piezometer. The appropriate transducer for this application is an absolute device because the transducer is sealed into a zone without access to atmospheric reference through the well. Drain cleaners that expand to more than 10 cm (4 inch) are available; plumbing supply stores carry test seals of various kinds that can be made into packers. Straddle packers also can be assembled by using soldered copper tubing through brass fittings.

Small water level differences between intervals separated by packers in a well can be measured with expensive, high-accuracy differential transducers that allow water in both ports or they can be measured as the difference between outputs of expensive high-accuracy absolute transducers. Alternatively, low-cost differential transducers that allow water in both ports can be used. In one case, pressure differences of several millimetres (a fraction of an inch) of water were measured between isolated intervals in a well at a submergence of more than 55 m (180 ft) using a differential transducer with a full-scale range of about 3 m (10 ft) of water. There was a large zero shift, but after establishing a new zero offset, valuable data were obtained at the beginning of the pumping period inspite of the fact that the pressure from submergence exceeded the overpressure specification by a factor of four and exceeded the specified range by a factor of 17.

A drop pipe that occupies much of the cross-sectional area of a well can be used to reduce storage in a well bore (*see* Fig. 2). Advantages of this design include the ability to measure the water level in the well without

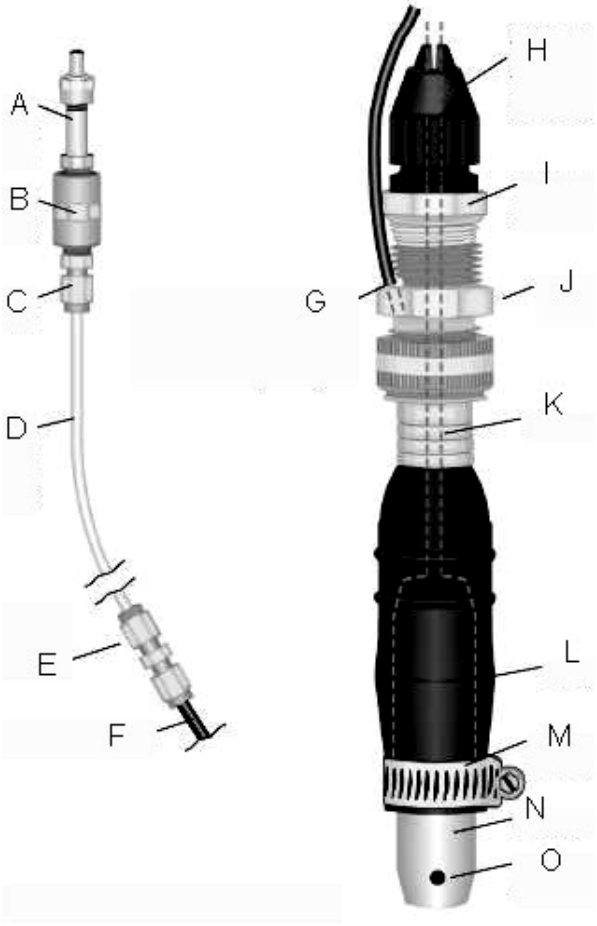

Key

A valve to 6 mm (1/8 inch) pipe fitting for pressure testing
B 6 mm (1/8 inch) pipe coupling
C 6 mm (1/8 inch) brass to 6 mm (1/8 inch) male connector
D 6 mm (1/8 inch) nylon tubing, extends to surface attached to transducer cable with nylon wire ties
E 6 mm (1/8 inch) brass union (nylon ferrules can be substituted for brass ferrules)
F 6 mm (1/8 inch) copper tubing
G fitting is drilled 6 mm (1/8 inch), and 6 mm (1/8 inch) copper tubing soldered for pressurizing packer gland
H strain-relief — about 10 wraps of polytetrafluoroethylene tape should be used for strain-relief to female pipe joints
I 15 mm (1/2 inch) to 10 mm (3/8 inch) or 6 mm (1/4 inch) threaded bushing, if necessary
J 15 mm (1/2 inch) brass female pipe to 20 mm (3/4 inch) male hose fitting
K transducer cable
L drain cleaner packer gland
M hose clamp (brass tip of drain cleaner is removed)
N pressure transducer housing
O vent at transducer plane to prevent capture of air bubbles

FIG. 1 PACKER BASED ON DRAIN CLEANER

removing the pipe, and the ability of the well to de-gas. For wells deeper than is practical for a standpipe from the surface, the pipe can be weighted, sealed at the top, and suspended by the transducer cable or a stainless-steel cable. To prevent a change in well-bore storage with changes in water level, the pipe must extend above and below possible water level fluctuations. The appropriate transducer for this application is a differential or vented device because the transducer is in water open to the atmosphere.

5 PLANNING CONSIDERATIONS FOR SENSOR SYSTEMS

5.1 General

The type and number of sensors and data recorders needed for automated collection of water level data depend on the objectives of the study. Determine these objectives prior to selecting system components. Options are numerous, but once the study objectives and needs are clearly determined, the selection of appropriate system components will be simplified. Some considerations for planning the installation of a water level collection system are presented below. For many installations, submersible pressure transducers may not be needed, nor may they be the most suitable water level sensors. In the following subclauses, however, submersible pressure transducers are assumed to be the preferred water level sensors.

5.2 Study Duration and System Reliability

Nearly all submersible pressure transducers are capable of providing accurate results for short-term studies (such as, aquifer tests or slug tests) but as the study duration increases, the chance of sensor failure and the amount of zero drift increases. Purchasing more expensive sensors, engineered to withstand the added demands of long-term deployment, may be necessary. Sensor maintenance and recalibration also becomes a consideration when designing a long-term data collection effort.

For long-term investigations, the data logger and power supply systems need more attention and protection. It may be necessary to recondition and recalibrate the data logger occasionally or to house it in a dry environment to prevent failure of components due to long-term exposure to moisture. Sensor cables may need to be protected with tubing or pipe to prevent long-term damage from ultraviolet radiation, physical weathering, exposure to ozone, or vandalism.

System reliability is among the most important considerations when designing a water level monitoring system to be operated over a long duration. Redundancy, designed into the system so a partial failure will not result in complete loss of data, can range from multiple sensors in the same borehole connected to one data logger to two or three completely separate systems logging water level fluctuations in the same well. If a high degree of reliability is important, the study should be budgeted to provide early warning of

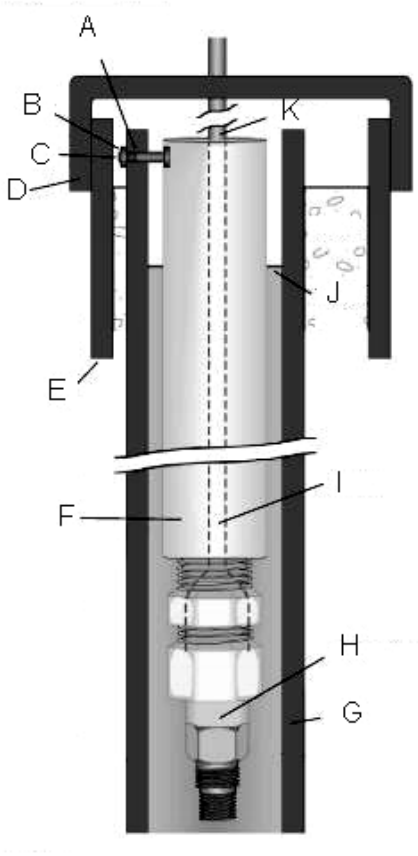

Key

A well casing slotted vertically for bolt
B nut
C bolt
D locking cap
E surface casing, large enough to contain data logger, battery and peripherals in sealed box
F drop pipe, drilled at top for bolt, with female adapter and fitting of appropriate size at bottom to hold the transducer. For deep wells, the drop pipe can be fitted with ballast weight, sealed with a strain-relief fitting and bushings at the top, and hung using the cable. The drop pipe must span the range of water level fluctuation to avoid a change in well-bore storage with water level fluctuation.
G well
H transducer
I cable
J water table
K cable

FIG. 2 DROP PIPE PROTECTION OF A SUBMERGED TRANSDUCER

system problems and fast access to replacement components to minimize down time.

Many manufacturers use terms such as mean time between failure and reliability to present durability information on their products. Mean time between failures is most commonly defined as the total time that a number of sensors operate, divided by the number of sensors that fail during the operational period. Reliability is the probability that an item will perform its intended function for a specified interval under stated conditions. Specified interval refers to the length of the study or test. Stated conditions refer to the operational environment — weather, humidity, temperature and electromagnetic interference. Most of the time, the specified interval or the stated conditions supplied by the manufacturer are not the same as those of the hydrologic investigation. Also, reliability specifications usually refer to a single component of what commonly is a multiple-component system. For example, a pressure transducer may have one stated reliability and a data logger may have a different stated reliability, and the reliability of the combination of the two components (the system reliability) will be different from either of the reliabilities of the individual components. Most of the time, the overall system reliability will approximate the reliability of the least-reliable component.

5.3 Required Accuracy

Systems of pressure transducers, data loggers, cables and other supporting equipment used for sensing and recording water levels in wells must be sufficiently accurate to meet the needs of the project. A water level sensing and recording system can be capable of performing within a measurement error of ±3 mm (0.01 ft) for most water level measurement applications. This measurement error may not be achievable for the case of large changes in water level (for example, during aquifer tests). An accuracy of 0.1 percent of the expected range in water level fluctuation would then be acceptable. Where the depth to water is greater than 30 m (100 ft), an accuracy of 0.01 percent of the estimated depth to water is generally acceptable. In summary, the measurement error and accuracy standard for most situations are 3 mm (0.01 ft), 0.1 percent of range in water level fluctuation, or 0.01 percent of depth to water above or below a measuring point, whichever is least restrictive. The subject of required accuracy is also in accordance with IS 15118.

While most sensor manufacturers produce devices that achieve acceptable accuracy, the added complexities of the wiring, data logger, power source and environmental variability may unacceptably degrade the overall system accuracy. Investigators may want to test the overall accuracy by conducting a pilot project before investing in a system that may not meet data objectives. In some cases, the desired accuracy may not be achievable with current technology or within budgetary constraints. For example, it is difficult to achieve a high level of accuracy with long leads, when depths to water are large, or when water level fluctuations are large. Stringent accuracy constraints require frequent check measurements in the field.

5.4 Installation Location and Site Accessibility

If the study site is nearby, then frequent visits to the site to download data, perform site maintenance, replace failed components, or make accuracy check measurements may be reasonable. If, however, the site is remote or difficult to access, then the system needs to be designed to be operated remotely and contain greater redundancy to better ensure uninterrupted collection of data. Remote sites may need an enhanced power supply, more robust shelters, extra data storage capacity, equipment to allow communication with the site and transmission of data from the site, two or more transducers in a well, and automated checks for sensor drift.

5.5 System Components and Compatibility

When designing a data collection system, determine which components are necessary and ensure that all of the components can communicate properly. Because power can be supplied by some data loggers, a short-term study might require only a pressure transducer connected to a data logger. For a long-term study, however, additional components including a power supply (batteries, solar panels, voltage regulator), additional data storage devices, a shelter or shelters, and a data transmission system may be needed. Ensuring compatibility between components becomes more difficult as the number of components increases. For example, some data loggers cannot interpret a digital signal from a transducer that makes an analogue-to-digital conversion at the sensor. Similarly, the type of analogue signal needs to be compatible; if the sensor sends an amperage signal, the data logger needs to be able to receive an amperage signal. Some pressure transducers require a separate measurement of temperature in order to correct the transducer output for changes in temperature in the well. If a data logger is not capable of receiving the temperature signal, the overall system accuracy is reduced. The data logger must also be able to supply the excitation voltage or current required by the sensor. When designing the installation, the number of sensors the data logger can simultaneously record needs to be considered.

5.6 Water Quality

Water quality must be considered when planning an installation. If the well will be used for water quality

sampling, the transducer and cable should be easy to clean before installing. Do not use lead or plastic coated lead weights to apply tension to the cable. If the well is at a contaminated site, consider the possible effects of contaminants in the water that may corrode or otherwise degrade transducer components. Select components that are corrosion resistant and easily decontaminated. Some manufacturers make chemical resistant transducers of stainless-steel or titanium, and polytetrafluoroethylene coated cables.

5.7 Number of Wells

For several wells in close proximity — for example, a nest of piezometers or multiple wells for a pumping test — one data logger that can receive signals from several pressure transducers usually is much less expensive than dedicating a data logger to each sensor. Data retrieval from one data logger also is much simpler. Instrumentation of many wells requires many pressure transducers, which can become cost-prohibitive for some studies. In some situations, it may be possible to prioritize the need for continuous water level data, and record water levels in key wells with pressure transducers and data loggers while manually measuring levels in other wells. If the study design calls for single, isolated wells to be instrumented, many manufacturers offer water level sensing systems that allow the pressure transducer, data logger, power supply and cabling to be installed inside the well-bore, thus protecting the entire system from the weather, vandalism, or theft.

5.8 Well Location, Diameter and Depth

The setting in which the transducer is installed needs to be evaluated prior to installation. Wells installed in areas subject to strong electromagnetic fields, such as, near generators, motors, pumps, power supplies, or similar devices may not be suitable candidates for some types of pressure transducers and may require additional protection and signal conditioning. Natural occurrences, such as, storms, precipitation and lightning likewise can affect the transducer and data logger.

Wells installed in remote locations commonly require provision for additional data storage. If site visits are infrequent, the data-collection system should be robust, may need to contain redundancies, and may need to have a data-transmission capability.

If well diameters are small [less than 5 cm (2 inch)], the choice of pressure transducers is limited. For example, many wells installed in peat deposits are of small diameter to reduce the time lag for pressure equilibrium due to the typically low hydraulic conductivity of peat. Although some transducers are as small as 1 cm (0.39 inch) in diameter, most strain-gauge pressure transducers will not fit down a well smaller than 3 cm (1.25 inch) in diameter. The investigator may need to choose a different type of transducer, such as, a vibrating wire pressure transducer, remembering that smaller transducers are usually more fragile.

Wells with a large depth to water present special problems for instrumentation. Unusually deep wells, where water levels range from tens of feet to several hundreds of feet deep, pose many unsolved anomalous data problems — spikes, drift, inexplicable rises and recessions, lost data — as well as correlation problems between manual and continuous data. Pressure transducers hung from long cables can be affected by cable stretch. The cable also can expand and contract with temperature changes, thus raising and lowering the transducer in the well and introducing errors into the data. The inclination of the well also can introduce errors into the data.

Sensors are susceptible to impact shock damage from hitting the sides of the well or being rapidly submerged during installation or calibration. Deep wells present more opportunities for this kind of mechanical damage.

Signals can degrade in long cables. The voltage attenuation and interference in long cables can cause erroneous data to be stored in the data logger. In addition to the effects on surface equipment, great differences in temperature and humidity between the surface and the water level, coupled with dissimilar metals, may lead to galvanic effects inducing voltages and transient currents that may distort the signal. The signal wires and their axially wound shields can act as inductive and capacitive circuits, which then may lead to ferromagnetic resonant effects, inducing transient currents into the signal-bearing channels. One solution is to convert the analogue signal to a digital signal at the sensor and transmit the digital signal up the sensor cable to the data recorder. Another solution is to transmit the signal using ac current from 4 to 20 mA current-mode transducers. Current-mode signals are less susceptible to degradation than the more common dc voltage-mode transmissions.

Vent tubes on long cables have an increased chance of becoming clogged simply due to their greater lengths. Because of the great depths in some wells, environmental conditions may cause a variety of problems with both water level measurements and data recording. The varying temperature and humidity and the atmospheric pressure gradients between the water level and land surface may cause vent tubes to become congested and ultimately allow moisture to be transported down into the sensitive electronic and mechanical portions of a pressure transducer. Preventing moisture entry is discussed in **7.7**.

Accurate check and calibration measurements are much more difficult when the depth to water is great. Manual wireline or tape measurement is more difficult because of the line stretch caused by weight induced tension or temperature induced expansion. These problems may call into question the accuracy of the data record when it is compared against the manual measurements.

5.9 Data Collection Frequency

For most water level investigations, the frequency of data collection is limited by the data logger and memory-storage system. Frequent observations require more memory in the data logger or storage devices. Commonly, water level data in wells are collected no more frequently than hourly. The daily mean of the hourly values may be computed by the data logger or subsequent database system for the purposes of reporting long-term trends. For aquifer-test applications, however, the pressure transducer may limit data collection frequency. In some situations, where recovery from an aquifer test is very rapid, observations should be made on the order of every 0.5 s. Some pressure transducers may take more time than that for the output to stabilize following excitation of the sensor. Some data loggers store the average of measurements taken over a period of several seconds, so recorded measurements of rapidly changing water levels may lag behind the true water levels.

5.10 Data Transfer

Data commonly are stored in a data logger or attached storage device, or both. In order to transmit the data from the logger to a computer in the office, a direct data logger download can be made during a site visit or the data can be accessed remotely. Remote access can include automated transmission by satellite phone line, cell phone, or radio signal; or the data can be stored on an on-site computer. The frequency of this transmission would depend on the timeliness of the data, ranging from the need for immediate transmissions to long transmission intervals designed to prevent exceeding the data storage capacity of the data logger or on-site storage device. Consult the manufacturers' manuals for data transmission techniques.

5.11 Cost

Most study objectives are compromised to some extent by budgetary constraints. Developing a priority of goals, and determining the cost of these goals, will provide the greatest value for the funding available. For example, if accuracy is the main goal, but maintaining an uninterrupted data record is a lesser priority, a study design could include very high quality pressure transducers but no system redundancies. Conversely, if maintaining a continuous data record is the highest priority, the study may be designed to have more than one sensor in each well, multiple data-storage systems, and backup power supplies, but use less expensive pressure transducers. The availability of personnel to service the data collection sites commonly is the single most important decision that needs to be made when designing a study. If the study can afford frequent site visits, the accuracy of data and continuity of record nearly always are increased.

5.12 A typical list of salient features of digital water level recorders (DWLRs) is given in Annex B for guidance.

6 ASSEMBLY, CALIBRATION AND TESTING

6.1 General

The user must be familiar with the behaviour of the transducer, its installation, its calibration and the sources of error in the calibration to ensure that the data collected are reliable and reproducible. Depending on the accuracy requirements of the study, as discussed previously, the user may choose to perform simple field checks of the transducer characteristics supplied by the manufacturer, or perform more detailed tests on individual transducers in the office. Studies requiring greater accuracy shall require more extensive testing of the transducers. User-assembled transducer systems shall require the most extensive testing.

6.2 Familiarization with Transducer Performance

6.2.1 *Overview*

Users should take time in the office to become familiar with new pressure transducers and data loggers, as well as with recalibrated transducers, before taking them to the field. Failure to do so can result in much wasted time in the field. Before submerging the transducer, a series of performance tests should be done in the office to determine:

a) effects of temperature on transducer output (*see* **6.2.2**),
b) drift characteristics (*see* **6.2.3**)
c) hysteresis effects (*see* **6.2.4**)
d) location of the transducer plane (*see* **6.2.5**), and
e) standpipe effects (*see* **6.2.6**).

6.2.2 *Effects of Temperature on Transducer Output*

To test, connect the transducer to the data logger and set the output interval to about 5 to 30 s, depending on transducer response time, with output to a computer so that numbers, a graph, or both appear on the screen. With the sensor upside down, place a few drops of

silicone oil in the transducer port. Compare transducer outputs with the transducer in a normal vertical position (as it would be in a well), upside down position, and in horizontal position. A fluid mass such as silicone oil below the transducer plane gives a highest reading with the transducer upside down, an intermediate reading sideways, and the lowest reading in normal vertical position. Warm and cool the transducer, noting changes in output. Vary the excitation voltage over its specified range, noting changes in transducer output. Leave the transducer to record for a few days at a constant temperature, and then leave it to record while the temperature fluctuates over a temperature range that includes the range of temperatures expected in the field. For gauge or differential transducers, the output during these tests should not change.

6.2.3 *Drift Characteristics*

The constant temperature test is a test of drift, exclusive of temperature effect.

The variable-temperature test is a test of drift including temperature effect. For the variable-temperature test, return the transducer temperature to the starting temperature and subtract the prorated drift to get the residual temperature effect. For an absolute transducer, subtract the output of an absolute pressure standard from the measurements to get drift and temperature effect. Sudden temperature changes applied to a transducer (such as, by holding the transducer in your hand, or lowering a transducer into a well) may cause unusual time-varying changes in output. These changes commonly are due to temperature gradients across the transducer element or among circuit board components.

6.2.4 *Hysteresis Effects*

Pressure tests to measure hysteresis are relatively easy to perform. Apply a vacuum to the transducer and release, noting output; then apply positive pressure and release, noting output when the output stabilizes. The difference between the stabilized outputs is hysteresis. Temperature tests for hysteresis can be done in a bath of ice and fresh water by warming the transducer and putting it in the bath, noting the output; then cooling the transducer in a bath of ice and salt water and returning it to the bath of ice and fresh water, noting the output. Temperature tests for hysteresis are difficult to perform on absolute transducers because air pressure may have changed by the time the transducer has come to thermal equilibrium at the three different temperatures. In field installations where the water level or temperature fluctuates rapidly, attaining the desired accuracy may require correcting the transducer readings for hysteresis.

6.2.5 *Location of the Transducer Plane*

An interesting test to perform on differential pressure transducers is to apply the full-scale pressure to both ports. If the transducers were truly differential, no change in output would occur. In fact, the sensing element has undergone a volumetric strain from the pressure change, and a change in output will occur. In silicon strain-gauge transducers, the change in output from application of full-scale pressure to both ports can be as much as 1 percent of the specified full-scale output. This shift is of little consequence in applications using high-range transducers. When using low-range differential transducers to obtain high resolution water level fluctuations, however, the shift caused by barometric fluctuations, which can be as much as 0.183 m (0.6 ft) of water, can produce errors of 1 percent times the ratio of the barometric fluctuation to the full-scale output of the transducer.

6.2.6 *Standpipe Effects*

The next set of performance tests is done in the office during and after submerging the transducer. If the transducer has an obvious port, fill it with water. A tiny piece of fine screen with openings smaller than 0.063 5 mm (0.002 5 inch) glued over the port will keep the water in and sand out. Inject water through the screen using a disposable insulin syringe, which has a very fine needle. The first wet test should be the effect of hydration on zero shift. For this test, note the pressure in a fixed orientation immediately after filling the port with water.

The next day, note the pressure (after ensuring that the port is filled to the same level) in the same orientation. Hydration may be noticeable in some transducers that contain silicone oil or gel in the sensing element or in the port. Hydration does not cause continuing drift, but it is necessary to ensure that the transducer is hydrated before it is installed to avoid having to subtract this small effect from the field data.

Perform the right-side-up, upside-down, and horizontal tests again, comparing the wet outputs with the dry outputs. The wet output minus the dry output, in pressure units of feet of water, gives the length of the port which is used to determine the transducer plane. If the port points down, the difference should be positive with the transducer upside-down and negative with the transducer right-side-up. Immersing the transducer in water should give the result of zero output when the transducer plane is even with the water surface. Another approach to determining the negative-standpipe effect is to connect a small-diameter copper or stainless-steel tube to the port, fill the tube and port with water, and bend the tube around until the tip is even with the transducer plane. Determining the transducer plane allows the user to become familiar with the positive and negative standpipe effects of the port. In field operations, if the port is not filled with

water, it will capture an air bubble. The pressure inside the bubble does not increase and decrease linearly with water level changes because the bubble's air-water interface moves up and down. In addition, the bubble will gradually dissolve, producing drift. Pulling the transducer out of the water to check zero drift will give a negative reading equal to the column of water held in capillary tension below the transducer plane. Without a screen or small tube, some or all of the water may be shaken out, giving irreproducible results for a zero-drift check and different subsequent drifts for bubble dissolution. Not all transducers exhibit these standpipe effects, and the effects may be negative or positive. Experimentation and testing, which will determine the effects for a particular transducer, should be done in the office before going to the field.

6.3 Linear Transducer Calibration

A common calibration procedure for pressure transducers uses a standpipe to obtain different values of submergence and a linear regression or straight line fit. The equation is:

$$V = a+bP \quad ....(1)$$

where

V = transducer output, usually, in millivolts;

P = pressure, in feet of water (*see* Table 1 for pressure-unit conversion factors);

a = y-axis intercept; and

b = slope of the best-fit line.

Equation (1) is solved for P giving:

$$P = \frac{V-a}{b} \quad ....(2)$$

In the calibration procedure, the variables P and V are commonly switched, giving:

$$P = a'+a'V \quad ....(3)$$

in which $a' = 1/b$ and $b' = -a/b$ from Equation (2).

This procedure is statistically incorrect because independent and dependent variables are not interchangeable. As a practical matter, however, when the coefficient of determination (r^2) is 0.999 9 or higher, the coefficients programmed into the data logger are identical.

Linear calibration of submersible pressure transducers can be done in the office using a vertical standpipe capped on the bottom and kept filled to overflowing with water, or in the field using a well. Be sure that no air is captured in the pressure port because, as explained earlier, the pressure at the diaphragm does not increase linearly with an increase in submergence when a bubble is present. Ensure that water temperature is constant throughout the water column, because density stratification in the standpipe will affect the pressure readings.

Calibration in a standpipe is done by inserting and withdrawing the transducer while maintaining the water level at the top of the pipe. The cable is marked and measured from the transducer plane at a minimum of five increments over the desired range of submergence. The transducer is submerged in the standpipe to a mark on the cable, and the distance and transducer output are noted. Repeat the procedure for all the marks. The linear regression coefficients are determined using a hand calculator or a spreadsheet program. Enter the coefficients into the data logger, and repeat the submergence procedure as a final calibration check. For the insertion and withdrawal phases, transducer output may not be identical for a given submergence depth. This difference arises from hysteresis and lack of repeatability in positioning the transducer at precisely the same depth. Some experimentation is needed to determine positioning errors. In a standpipe calibration, it may be difficult to maintain or vary the temperature of the transducer in a controlled way. The transducer may also be calibrated in an observation well, as described in **7.8**.

Table 1 Pressure Unit Conversion Factors

(*Clause* 6.3 *and* A-1.3)

Sl No.	**Multiply**	**FPS**[1)] lb/inch^2	**MKS**[2)] kg/m^2	N/m^2 (pascal)	**Temperature Specification**
(1)	(2)	(3)	(4)	(5)	(6)
i)	lb/inch^2 (psi)	1	1.422×10^1	6.895×10^3	–
ii)	ft of H_2O	4.336×10^{-1}	3.048×10^2	2.989×10^3	4°C
iii)	inch of Hg	4.912×10^{-1}	3.453×10^2	3.377×10^3	0°C
iv)	mm of Hg	1.934×10^{-2}	1.359×10^{-3}	1.333×10^2	0°C
v)	atmosphere (atm)	1.470×10^1	1.033×10^4	1.013×10^5	–
vi)	N/m^2 (pascal)	1.450×10^{-4}	1.020×10^1	1	–
vii)	bar	1.450×10^1	1.020×10^4	1.000×10^5	–
viii)	kg/m^2	1.422×10^1	1	9.807	–

[1)] FPS: foot-pound-second measurement system.

[2)] MKS: meter-kilogram-second measurement system. One kilogram mass under standard gravitational acceleration.

6.4 Sources of Error in Linear Calibrations

The problem with linear regression for calibration of silicon strain-gauge pressure transducers is that the procedure leaves significant residual errors while giving the false appearance of a good fit when the calibration points are plotted on the same graph as the straight-line fit. In fact, the r^2 for linear regressions can exceed 0.999 99, while errors of as much as ± 0.3 percent exist between the calibration points and the individual linear-regression equations. Major sources of error in linear calibration are thermal effects on the transducer and non-linear response of the transducer. Different manufacturers' transducers exhibit different curvature and temperature effects in their calibrations. The critical test in the calibration procedure involves plotting residuals of the calibration equation minus the calibration points. When the range of that plot is less than the accuracy required by the user, the calibration is adequate.

Thermal effects in a transducer can arise when water temperatures change at the transducer. In wells and piezometers, geologic features, such as, faults, fractures and joints can provide conduits of high hydraulic conductivity. If the head varies between these features with time, water can flow vertically in the well, producing temperature changes. Well screens or gravel packs spanning aquifers with intervening confining units can allow flow within the borehole in response to nearby pumping owing to differences in hydraulic conductivity and specific storage between the aquifers. For example, a temperature change of 3.4°C (38°F) in 15 min was observed at a depth of 51 m (167 ft) in an alluvial aquifer in response to turning on a pump in a nearby well.

Inadequate or non-existent temperature compensation produces thermal effects in pressure transducers. Bridge networks in transducers commonly are compensated to:

a) counteract the effects of temperature changes of the transducer on the output voltage;
b) achieve an output voltage very close to zero for zero-differential or absolute input; and
c) pressure, and achieve a selected output voltage for full-scale pressure input.

The compensating networks commonly consist of series and parallel resistors, some of which exhibit temperature effects opposite to those of the transducer. Because a compensated design is a solution for the average of a transducer model, and because individual transducers vary, a particular design will reduce some errors and, in the process, introduce other, smaller errors. A compensated design may make it difficult to use a transducer below a manufacturer's error specifications and may make temperature correction by the user much more difficult than uncompensated designs. Some manufacturers apply a simple linear shift or offset for temperature compensation. Such compensation does not usually interfere with user determined temperature correction of transducers to achieve higher accuracy.

6.5 Temperature Corrected Transducer Calibration

A procedure that is more complicated than linear calibration, but is entirely manageable, can reduce residual error to ± 0.03 percent of full-scale output or less. The pressure transducers are calibrated at five pressures at each of three temperatures in a water bath in a Dewar flask, insulated water jug, or wide-mouth thermos bottle (*see* Fig. 3). A calibrated field standard (precision transducer) with specified accuracy of ± 0.01 percent of the full-scale reading is used with a hand pump. These components are connected either by plastic tubing and barbed nylon fittings or by 6.35 mm (0.25 inch) diameter drip irrigation tubing and fittings that also distribute pressure to several transducers. A data logger collects and stores data from several pressure transducers (through differential analogue inputs), from the field standard, and from several temperature sensors in the water bath (through single-ended analogue inputs), transmitting the data to a computer screen.

Immerse a precision thermistor connected to a display with a specified accuracy (±0.01°C or ±0.02°F) in the bath for calibrating the temperature sensors. Immerse the transducers in the water bath, allow them to equilibrate for about half-an-hour with an occasional stir to maintain even temperature distribution, and make a set of nearly simultaneous measurements of all the sensors for each of five pressures over the pressure range of interest. Repeat the measurements at two more temperatures, allowing half-an-hour equilibration at each temperature.

Because the field pressure standard is an absolute transducer, the calibration is straightforward. It has a tare switch for subtracting starting pressure; thus it can be used to calibrate differential transducers if the series of five pressure measurements is made reasonably quickly and the tare value is checked at the end of the five measurements. Reset the tare at each new temperature before each set of five pressure measurements. As a practical matter, atmospheric pressure does not change rapidly enough to be a problem in calibrating differential transducers, although sudden opening of doors (which cause changes in barometric pressure) should be avoided during a set of nearly simultaneous measurements. Note that the standard can be permanently damaged by overpressurization. Although some standards have

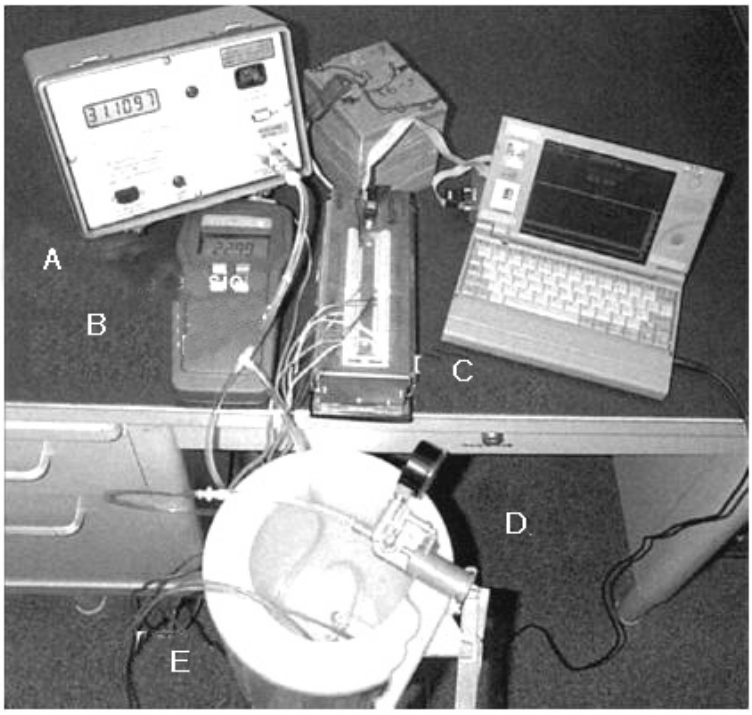

Key

A pressure standard
B precision thermister display
C data logger
D hand vacuum pump
E Dewar flask

FIG. 3 EQUIPMENT USED FOR TEMPERATURE CORRECTED TRANSDUCER CALIBRATION

a pressure-warning alarm that can be set, it is wise to choose a pump that cannot overpressure the standard. A bath filled with finely crushed ice and just enough de-ionized water to make slush can be within ± 0.04°C of 0°C. Because of its repeatability and usefulness in calibrating transducers for temperature, the ice-water bath is a good choice for one of the calibration temperatures. Record the output time for each pressure manually, along with the readings from the pressure standard and precision thermometer, and use them to edit the data after they are transferred to a spreadsheet program. This calibration procedure produces values of voltage for ranges of pressure and temperature.

Multiple regression is used to determine the calibration equation for each pressure transducer. An equation that can reduce residual error with respect to the standard to ±0.03 percent over the calibration range of water level fluctuation is:

$$V = a + bP + cP^2 + dT = eT^2 + fTP \quad ...(4)$$

where

V = transducer output, in millivolts;

P = pressure;

T = temperature; and

a, b, c, d, e and f are regression coefficients.

Solving Equation (4) for pressure gives:

$$P = -(fT + b) + \frac{\sqrt{(fT + b)^2 - 4c(a + dT + eT^2 - V)}}{2c} \quad ....(5)$$

The value of r^2 using Equations (4) and (5) can exceed 0.999 999 9. In the spreadsheet, columns P^2, T^2 and TP are generated from the data columns of T and P. Multiple regression is then used to generate the coefficients a, b, c, d, e and f. The coefficients c, e and f of P^2, T^2 and TP are all small, but the removal of any of these terms leaves a much larger residual than that from Equation (5). If a temperature sensor is installed with the pressure transducer or built into its housing, Equation (5) can be programmed into a data logger or calculated in a spreadsheet to give temperature-corrected output. Before removing a group of pressure transducers from the calibration equipment, check the

entire calibration procedure by entering the coefficients and checking the temperature-corrected output against the output from the pressure standard for representative temperatures and pressures.

The pressure standard and precision thermometer are expensive. However, if many transducers are to be calibrated or if accuracy of ±0.1 percent of full-scale or better is required, the convenience and accuracy of a pressure standard are well worth the cost.

7 INSTALLATION

7.1 General

For the successful collection of data, the submersible transducer and data recording system must be correctly installed. This clause provides general guidelines and suggestions, including the proper care and handling of transducers, considerations for designing shelters for equipment, discussion of suspension systems and desiccation systems and field procedures for calibrating the transducer and optimizing the transducer's position in the well.

7.2 Care and Handling

Proper care and handling of a transducer is essential to its reliable operation. Most submersible pressure transducers come with a factory warranty, with specific instructions on necessary maintenance, and with a warning about mishandling. Failure to follow the instructions and warnings could cause irreparable damage to the transducer, void any factory warranty, and cause the corruption or loss of valuable data. The most common causes of damage are sudden impacts, freezing or overheating of the transducer, and sudden, extreme pressure changes (water hammer). Improper electrical connections also are a common source of transducer damage or failure.

Sharp impacts can break the body of the transducer and dislodge or break delicate electronic components. Keep the transducer packaged in its original shipping container until it is ready to be installed. After removing it from the packaging, take precautions to prevent the transducer from being dropped. Avoid sharp contact with the sides of the well or piezometer casing during installation and calibration. Do not over torque a transducer when fitting it to an auxiliary threaded device such as a counterweight or packer housing.

Exposure to temperature extremes beyond the manufacturer's design specifications also can damage a transducer. Freezing or overheating can damage the sensor's electronics and, in extreme cases, damage its waterproofing by causing warping or cracking, disintegration or melting of the waterproofing material. The severity of damage to the waterproofing material of the transducer depends on the methods and materials used. Exposure to temperature extremes prior to installation can be avoided by storing the transducer in a cool, temperature-controlled environment. Most transducers come from the manufacturer with specifications as to the extremes of the operating temperature. The transducers should not be operated under, or exposed to, conditions that exceed the design limitations. Submersible transducers used to monitor changes in water level commonly are designed to function in the range of –20 to 50°C (0 to 120°F), though transducers operating through a greater range of temperature extremes are available.

Most submersible transducers are designed to monitor pressure in a variety of fluids; the specifications may state that the transducer can be operated at temperatures below 0°C (32°F), but it should be remembered that fluids other than water have different freezing points. As common sense dictates, transducers submerged in water generally cannot be operated at or below freezing temperatures because ice crystals will form and damage the transducer. This prohibits their use in surface-water applications where temperatures can fall below water's freezing point.

Sudden, extreme changes in pressure also can damage a submersible transducer. A common mistake is letting a transducer free-fall into the water during installation. Instead, gently lower the transducer into the water to the desired submergence depth. Be aware that transducers installed in wells subjected to frequently repeated and significant changes in water levels can show signs of wear sooner than usual. This is common with vibrating-wire transducers or transducers that use a diaphragm, on a long-term basis, to monitor observation wells located near pumping centres. Frequent, rapid rises and falls in water levels can cause the wire or diaphragm to fatigue at an accelerated rate, a situation which usually manifests itself in an accelerated rate of calibration drift.

Another common cause of damage to an installed transducer is overpressuring. The factory specifications commonly list three sets of pressure limitations. The first is the calibration range of the sensor. Operating the transducer slightly outside of this range will not damage it. The second pressure specification is the operating range, commonly twice the calibration range for silicon strain-gauge transducers. For example, a transducer designed for sensing 0 to 34.5 kPa (0 to 5 psi) will provide output up to 68.9 kPa (10 psi) without damage. However, the transducer calibration may not hold for pressures above the specified calibration range. The third type of pressure limitation is the maximum pressure that a transducer can be subjected to before being physically damaged. This limit, which varies from one manufacturer or

transducer design to another, is usually 2 to 6 times the calibration range. This equates to 68.9 to 206.8 kPa (10 to 30 psi) for a transducer designed to monitor 0 to 34.5 kPa (0 to 5 psi). If a transducer is subjected to pressures exceeding the operating range, but not exceeding maximum pressure tolerance, the unit may not be damaged, but data can be lost. Once the pressure falls to within the operating range, the transducer will recommence correct output, because only the output range of the electronic components has been exceeded. In summary, to minimize damage to a transducer, strictly adhere to the manufacturer's specifications for care and handling.

7.3 Shelter

Data loggers, power systems, data cables from the transducers, well casings and other equipment must be protected from weather extremes, from damage by animals and insects, and from vandalism. It may also be necessary to shelter a person servicing the site from extreme weather conditions. In addition, equipment for some study locations in scenic areas must blend in with the local surroundings. All of these factors must be considered in designing an equipment shelter. Fig. 4 shows one type of shelter design. This design can be used when there are no requirements for limiting visual impact, there is minimal risk of vandalism, and there is very little other equipment needing shelter. This design mounts directly to the metal casing protecting the observation well or wells. The fibreglass environmental box provides enough space for one data logger, one backup storage module, one 12 V battery, one desiccant chamber and one solar panel charger and regulator. It does not provide shelter to the servicing groundwater scientist. A 2 m by 2 m (6.6 ft by 6.6 ft) shelter will provide ample space for equipment and personnel. Transducer and logger systems small enough to install in the well eliminate the need for above-ground shelters and should be considered for use in areas where vandalism is a problem. Some data loggers are designed to fit on top of the well casing but inside the outer metal protective casing, whereas others are designed to be suspended in the well, either above or below the water level.

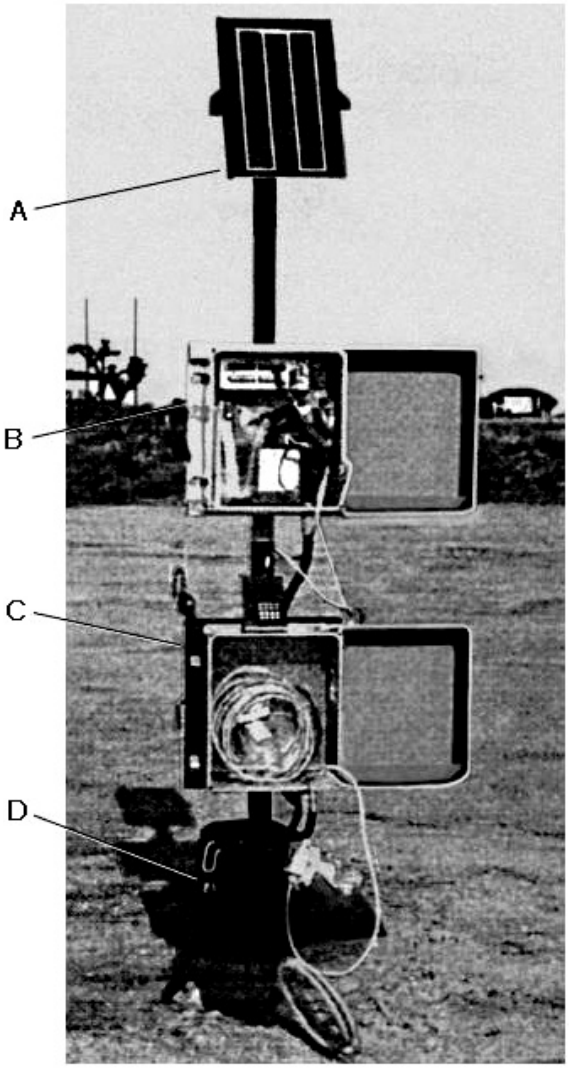

Key

A solar panel
B shelter with power supply and data logger
C shelter with vent tube and desiccant
D well head

FIG. 4 SHELTER DESIGN FOR A PRESSURE TRANSDUCER INSTALLATION

7.4 Power Requirements

The amount and type of power required to operate a pressure-sensing system are specific to the instruments used at a given site. The type and number of transducers used, the type of recording device and the frequency at which the data are recorded all affect the power requirements.

Each type of transducer and each data logger has its own power consumption rate, usually expressed in milliampare. Transducers, data loggers and other electronic components also have specified voltage ranges for their operation. The user should refer to the owner's manual for an instrument's power requirements. Instrument manufacturers commonly have staff available to advise on the best way to configure an instrumentation system. Most systems are operated using dc, but some sophisticated systems may require a combination of dc and ac power. The user-defined scan rate and recording frequency of a data logger program affect power consumption. Power consumption will be greater for installations in which

the data logger is connected to more than one pressure transducer.

Proper grounding and shielding of the transducer, supplemental instruments and data logger will minimize errors. Grounding and shielding should include protection of the power supply system. A wiring diagram illustrating how the sensors are connected to the data logger will save time when changes occur, and also will allow someone who is not familiar with the site to troubleshoot or replace equipment. Because data can be lost as a result of poor wiring connections, all connections should be checked and tightened periodically. Daily temperature fluctuations in the instrument shelter can cause terminal screws to work loose.

Rechargeable batteries commonly are used to power the instruments. A good practice is to record the voltage of the battery or other power supply at regular intervals in order to monitor power consumption to help evaluate the adequacy and performance of the power-supply system. Using batteries minimizes problems caused by power outages or surges. When a battery is the primary source of power, a solar panel array, or a battery charger attached to ac wiring can be used. The power source must be compatible with the type of battery used and must be adequate for the power consumption requirements of the transducer and data logger. For systems that have large power consumption rates, ac power may be needed as the primary power source. In this case, batteries can provide emergency power for short periods of time.

7.5 Hanging Transducers in Wells

The transducer should be suspended in place in the well or piezometer from a stable fixed point called the hanging point (*see* Fig. 5), secured either to the well casing itself, to the inside of an instrument shelter, or to the protective outer casing of the well. A pressure transducer may be suspended by its electrical cable in wells where the depth to water is small, but for greater depths the electrical cable may expand or contract, changing the depth at which the transducer is suspended. For deeper installations, or where the manufacturer requires it, a suspension system is necessary. Where local sediment compaction or regional land subsidence is occurring, differential movement of the suspension system and the well can be a problem if the suspension system is attached to an instrument shelf resting on land surface. The suspension line must be secured to a point attached to the well casing. This will allow the transducer to move along with the well casing. One method of attaching the cable to the wellhead is to use nylon wire ties or stainless-steel hose clamps secured to a hook shaped nail designed for electrical conduit. Hose clamps can be used with mesh cable clamps for added security. Experiment to make sure that pulling on the clamp makes the clamp tighter.

Some transducers come with the suspension cable, vent tube and transducer wiring incorporated into a single unit. Other transducers need a separate suspension line, which can be made of stainless-steel aircraft cable. A high-test fishing line, preferably made from plastic-coated stainless-steel cable, also works well for this purpose. Cable stretch is seldom a problem for suspension lengths of less than 100 m (300 ft). A cable grip, available from an electrical supply outlet, will hold the vent tube and wiring cables in place for either type of suspension system. The suspension method is necessarily site specific and transducer specific. Secure all cables, vent tubes and suspension lines so that they do not slip while still permitting the vent tube to be open. Mark all cables and suspension lines to help determine if there has been any slippage, and to provide a way to precisely measure how much slippage has occurred. Cable slip can be detected by marking the cable with indelible marker or contrasting-colour silicone rubber. Reference this mark to a fixed point such as the measuring point (MP) for the well.

An MP mark can be filed or sawed from the outside of the casing to just touching the inside edge of the casing. Depth to water is measured from this point. Using the highest point on the well casing makes surveying the elevation of the MP easier. At well heads with pumps, concentric casings and other complications, a different measuring point may have to be chosen, marked and noted. Two considerations are ease of surveying (either by global positioning system or by levelling), and the ability to precisely align the holding point of the tape or electrical sounder.

Some transducers should be fitted with an appropriate ballast weight to counteract the buoyancy of the transducer and cables when submerged. An inexpensive alternative is to slide stainless-steel nuts and washers over the suspension cable, resting them on top of the transducer. Washers should have an outside diameter of approximately the same dimension as the transducer. If a weight is attached below the transducer, the weight should be attached with a fine wire securely enough to stay on while lowering and raising the transducer, but weakly enough so that it would break free and allow the transducer to be retrieved, if the weight became stuck in the well. It requires some experimentation to determine the amount of weight necessary to keep the cable taut without breaking any electrical wires. Select ballast-weight materials carefully to avoid introducing unwanted constituents to the well. Do not use lead or plastic-coated lead weights. Even if the well is not being currently monitored for water quality constituents, it may be in the future.

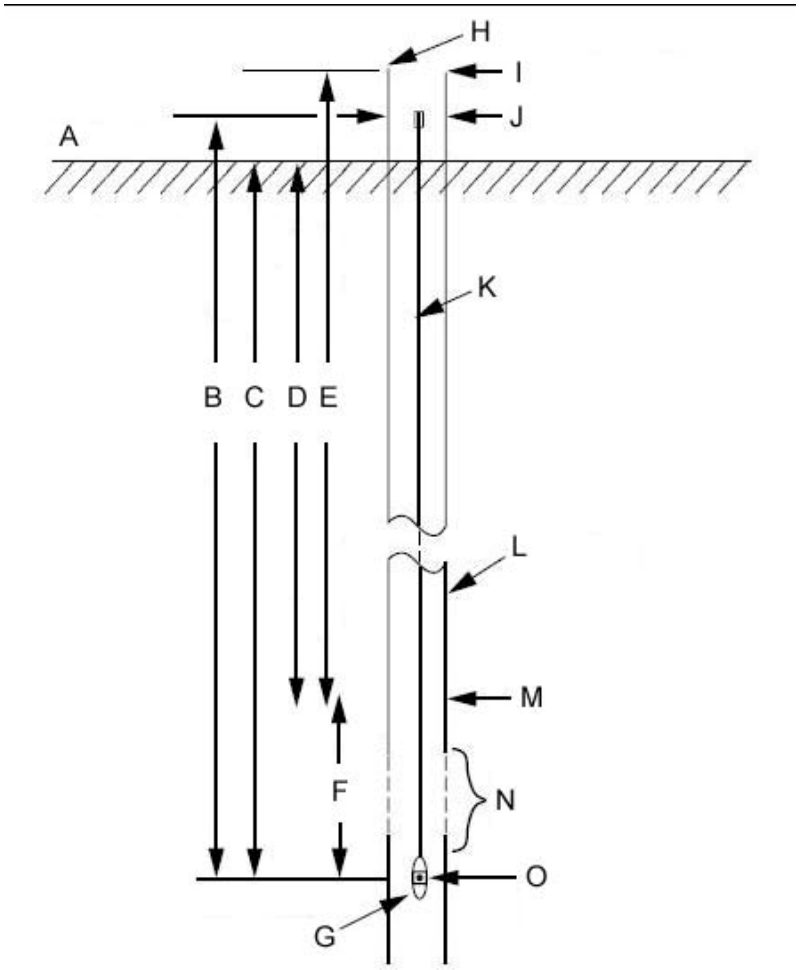

Key

A	land surface	*I*	measuring point
B	hanging depth	*J*	hanging point
C	set point	*K*	suspension cable
D	depth to water below land surface	*L*	well casing
E	depth to water below measuring point	*M*	water level
F	submergence depth	*N*	casing open to aquifer
G	submersible transducer	*O*	pressure port plane
H	top of casing		

FIG. 5 SUBMERSIBLE TRANSDUCER IN AN OBSERVATION WELL

Transducers can be hung 100 m (300 ft) in a well using just the electrical cable without unwanted stretch in the cable and with an analogue signal in the millivolt range. Greater depths may be achievable with experimentation. Problems to address include,

a) signal degradation from noise in long electrical cables;

b) resistive line loss and changes in line resistance with temperature changes in excitation leads; and

c) internal breakage and separation of electrical conductors. Conductor breakage can be avoided by attaching the electrical cable to a stainless-steel cable with wire ties so that the electrical cable is initially slightly relaxed and will not be under tension when the assembly is in the well.

The principal objective of selecting a submergence depth at which to hang a transducer during installation is to ensure that water levels do not exceed the transducer's operational range or fall below it during the monitoring period. Historical water level measurements can be helpful when designing a long-term water level monitoring program . The determination of expected daily or seasonal extremes for a given well is easier if many measurements have

been made. Thus, the appropriate range for a transducer can be selected, and its optimum position estimated. To minimize potential for errors and simplify subsequent data processing, reposition the transducer infrequently. Under ideal conditions, the transducer can be hung at a single depth for the entire monitoring period, although it may be necessary to reposition a transducer once or twice during a season, especially when monitoring wells in areas where seasonal ground water pumping prevails. In some locations, it is possible to have a range in water level of 30 to 60 m (100 to 200 ft) during a year. A transducer with a large range in output may be used; however, measurement resolution decreases as the transducer's range increases. In this instance, the data requirements must be considered. If high resolution is required, a transducer with a smaller range will be needed, thus requiring that it can be repositioned more frequently so that the water level remains within its range.

7.6 Measuring System Drift

As a means of checking system drift, periodically measure water levels in the well containing the pressure transducer using a steel tape or sounder. Drift is calculated by determining the difference between the recorded water level and the actual measured water level. As discussed in **7.5**, this drift includes possible cable stretch and slip. The effect of cable stretch and slip can be measured by pulling the transducer above the water level and making a reading. The difference between the offset and the drift is the cable stretch and slip. This test requires that the transducer plane and the port not be separated vertically, or that some technique be employed to alleviate this discrepancy. If the port is below the transducer plane, the transducer may measure the negative gauge pressure of the water column. If the transducer is jostled, some or all of the water may fall out of the port, resulting in a smaller magnitude negative pressure, which may not be repeatable from test to test. If water is lost out the port, a residual error will remain after re-submergence until the compressed air bubble dissolves. This problem can be alleviated by following the procedures described in **6**.

7.7 Desiccation Systems

For many strain-gauge transducers, it is necessary to keep moisture from entering the transducer's vent tube. Connected to the inside of the transducer at the diaphragm, the vent tube transmits atmospheric pressure changes to the pressure-sensing unit in the transducer housing. Because vent tubes also act as direct conduits for moisture to contact the transducer's components, an adequate desiccation system is necessary to eliminate faulty data and moisture damage. Many transducers are supplied with an air desiccation system, but because some are inadequate for very humid conditions, the person installing and maintaining the transducer must ensure that the air desiccation system functions properly. An adequate desiccation system is essential for obtaining reliable, long-term data and for extending the transducer's life. Where conditions are very humid, for a long vent tube, or for a large diameter vent tube, it may be necessary to install a supplemental desiccant system. Small diameter vent tubes are highly susceptible to blockage by the accumulation of water droplets in the tube, which will cut off or adversely affect the communication of atmospheric pressure to the transducer, thus causing erroneous data. Eventually, these droplets make their way down into the transducer, wetting the components and permanently damaging the sensor. Because long vent tubes or large diameter vent tubes hold a larger volume of air, they require a desiccating system of greater capacity. When the desiccation system is housed inside a weather proof shelter, provisions for communication of changing atmospheric pressure must be made by making vent holes in the shelter; these can be covered with a flexible diaphragm that will allow for the transmission of changes in atmospheric pressure to the vent tube and, at the same time, provide an impermeable moisture barrier. If absolute and sealed-reference transducers are used, a desiccation system is not needed because these devices have no vent tubes.

The internal wire bundle can be used as a vent tube to depths of more than 30 m (100 ft). The cable can be vented below its hanging point in the well by inserting into the wire bundle a syringe needle (with the sharp tip ground smooth to avoid penetrating any insulated internal wires) and sealing the hole with silicone rubber cement and electrical tape. A small desiccant pack can be put in a 60 ml syringe-bore (after removing the plunger), and the plunger end of the syringe can be sealed with a partially relaxed, thin plastic glove to make a pressure-transmitting, humidity isolating chamber. Some experimentation squeezing on the glove and noting the change in transducer output will be necessary to ensure that both positive and negative barometric changes are transmitted down the vent tube or wire bundle. If the desiccant chamber is used on a transducer cable below the hanging point, seal the end of the cable with silicone rubber cement and tape and, using a hand pump or syringe plunger, perform a vacuum test of the seal integrity.

7.8 Transducer Field Calibration

Although most transducers are calibrated at the factory and come with the manufacturer's calibration specifications, an individual calibration check should still be done in the field as each transducer is installed.

A field calibration check incorporates the effects of all system components and local environmental conditions, including water density. In addition, the calibration for the transducer's entire pressure range should be checked periodically, whenever water level measurements show that the calibration is not holding, and when the transducer is removed from the well at the end of data collection. Perform the calibration after installing the instrumentation so that any signal alteration that might occur between the transducer and the data logger is incorporated. Set the data logger to display the transducer readings at as high a resolution as possible.

Calibrate the transducer in the well by submerging it, lowering and then raising it by known increments and by comparing this incremental distance change with the transducer output change. By getting multiple readings at each calibration point and by moving the transducer up and down in the well, values are obtained that will be 'averaged' during the regression computation, thus minimizing bias associated with hysteresis in the system. Use a minimum of five points, in each direction, covering the calibration range or the operational range of the transducer. Determine the effects of pressure hysteresis by taking measurements while raising and lowering the transducer through the entire operational range.

Moving the transducer and cable in the water column displaces water in the well. Small-diameter wells in less-permeable formations are the most prone to having water levels altered by displacement. Transducer readings should be used for calibration only after the water level in the well has stabilized between calibration points. The stabilization time will depend on the permeability of the geologic formation, and the ratio of the transducer and cable diameter to the well's diameter. Verify a stable water level with a calibrated measuring tape. After stability is attained, take several readings (minimum of 3) of the transducer output, then move the transducer to the next calibration point and repeat the process, again waiting for the water level to stabilize.

Take care to precisely measure the distance the transducer is raised and lowered to minimize calibration errors caused by errors in distance measurements. Check the measuring tape for accuracy.

Use a standard worksheet, such as shown in Fig. 6, to record field calibration data. Some of the positions in Fig. 6 have been completed as an example. Note that the calibration was not checked for the transducer's full range; this is acceptable if the expected water level range is less than the range of the transducer or if the calibration is being checked for a range of data previously recorded.

Even though the transducer may be able to withstand pressures greater than the operating range specified, the calibration slope of the instrument may be different above its calibration range. If it is expected that the calibration range will be exceeded, a separate calibration can be made for that range. Preferably, a transducer will be selected that is designed to work under the extremes of water level fluctuation expected for the site, thus avoiding the problem of exceeding the calibration range.

After obtaining the calibration points, a calibration equation for the transducer can be easily determined by computing a linear regression using any basic statistical software package. Because the slope and offset of this equation only converts the transducer's output into its submergence depth, an additional correction must be added to the calibration equation to convert submergence depth to depth below land surface (DBLS). Obtain this by comparing the measured water level, after the transducer is set in its final position (set point), with the converted output from the transducer (depth below water surface) and applying this to the regression equation. The general form of a linear calibration equation is $y = mx - b$. The final calibration equation is as follows:

$$\text{DBLS} = S_P - MS_r + O_S \qquad \ldots(6)$$

where

DBLS = depth to water below land surface datum, in units of length;

S_P = set point distance, in units of length; the measured distance below land surface datum of the pressure transducer at the time of installation;

M = transducer output, in units of pressure, length, or millivolts at a specific time;

S_r = slope of the generalized least-squares regression equation, in units/length; and

O_S = offset (zero intercept) in the regression equation, in units of length.

The resulting equation can be applied to the output of the transducer either by converting directly to water level as DBLS in the data logger at the site or, later, by applying the equation as the data is adjusted for the database.

Document all changes to the data logger program, and make information available in the field to allow on-site determination of the potential for over-ranging or water levels falling below the transducer position. A preprinted form should include:

a) the altitude of the land surface and measuring point;

						Data Processing No.			
Site name:	i.e. site name and location coordinates								
M.P. used:	i.e. measuring point elevation			Party:					
Date (mm/dd/yyyy):				Julian date:				Time:	
Measuring Device:	i.e. calibrated steel tape or electric tape								
Transducer Information									
Date:		Type:		Length:		Serial No.		Output:	
Units of reading:	i.e. mV, mA, kPa, psi			Range:		Conversion:	i.e. equation		
Calibration marks (Describe mark used on transducer cable for measuring distance moved during calibration process):									
Out-of-water reading:				Set Point reading:		Scan Rate:		Reset?:	Y/N

Time	Water Level (DBLS)	Calibration Mark	Distance Between Marks	Total Distance	Readings	Comments
1014	22,35		1,00		0,4334	
1015		1		1,00	0,4337	
1016	22,35		1,50		0,4332	
1022	22,35				1,0838	
1023		2		2,50	1,0841	
1024	22,35		1,50		1,0840	
1030	22,34				1,7341	
1031		3		4,00	1,7337	
1032	22,34		1,50		1,7339	
1039	22,33				2,3843	
1040		4		5,50	2,3846	
1041	22,33		1,50		2,3844	
1047	22,33				3,0346	
1048		5		7,00	3,0342	
1049	22,33		1,50		3,0351	
1058	22,32				3,4682	
1059		6		8,00	3,4685	
1100	22,32		1,00		3,4678	
1106	22,32				3,0392	
1107		5		7,00	3,0388	
1108	22,32		1,50		3,0390	
1114	22,32				2,3887	
1115		4		5,50	2,3889	
1116	22,32		1,50		2,3891	
1120	22,31				1,7514	
1121		3		4,00	1,7516	
1122	22,31		1,50		1,7517	
1126	22,31				1,1011	
1127		2		2,50	1,1013	
1128	22,31		1,50		1,1010	
1134					0,4509	
1135		1		1,00	0,4507	WL rise of 0.04 during calibration
1136			1,00		0,4507	

FIG. 6 EXAMPLE OF CALIBRATION WORKSHEET FOR SUBMERSIBLE TRANSDUCERS

b) the distances between the measuring point and hanging point, set point, and the hung depth; and

c) an inventory of equipment installed at the well.

Take the field form to the field for data retrieval and periodic water level measurements.

Calibration-slope checks are possible in the field on a differential transducer without pulling the transducer from the well. After removing the desiccant, connect a

hand pump and pressure standard to the vent tube. Apply a vacuum in increments, noting the approximate time to stabilize the pressure and the pressure value from the data logger. The data logger will exhibit increasing pressures that correspond with decreasing pressures in the pressure standard. Changes in time to stabilization would indicate possible leakage or wiring deterioration in the transducer cable.

7.9 Optimizing Measurement System Performance

In some cases, an analysis of the individual components of the pressure measurement system, either by laboratory calibration or by calculation from dc circuit analysis, may indicate a total error exceeding the desired accuracy of the system. Several procedures can be followed to enhance overall system performance and reduce the total error to the desired accuracy. These include the following:

a) Use an in-place system calibration to simultaneously measure the combined effects of the transducer and associated measurement equipment. Lower a transducer into a well-bore to different submergence depths; an example of this technique is described in **7.8**.

b) Before recording the output of the transducer, increase the delay time following excitation. The output voltage curve of the transducer, as a function of time, must be established to determine when its output is stable with respect to the measurand.

c) Calibrate the transducer either at the operating temperature or over a controlled temperature range so that the data can be adjusted for the effects of temperature, which must be monitored simultaneously.

d) Use a constant current instead of voltage to excite the transducer. Establish current settings which ensure that the voltage across the transducer is within specified tolerances for the unit. This technique is especially advantageous when operating transducers over long lead lines.

e) Calibrate the transducer over a narrower pressure (and temperature) range than its full range specification.

f) Calibrate and operate the pressure transducer in an overpressure range to enhance its sensitivity.

g) Calibrate the transducer with the full length of its lead wires attached so that the calibration will include the resistance of the leads. Calibrate the transducer at the excitation voltage or current to be used during field data collection.

h) Calibrate the transducer at a variety of temperatures and pressures. Fit a non-linear, multiple-parameter (pressure and temperature) regression equation (second order or higher polynomial) to the data used to convert transducer output to an equivalent pressure.

j) Use one channel of the datalogger to monitor a precision wire-round resistor. Use this apparent change in resistance to correct for offset and drift in the data logger.

k) Apply power to the transducer for several hours (burn-in time) before calibrating and using it.

m) Use proper grounding and shielding techniques.

Because the temperature error commonly is predictable, the pressure measurements can be adjusted if the temperature is recorded simultaneously. Another method of improving system accuracy is to artificially control the temperature of the transducer and associated measurement equipment by keeping the equipment in a heated enclosure maintained at a constant temperature. If the ambient temperature can be kept unchanged, then this source of error can be eliminated.

8 DATA COLLECTION

8.1 General

Because operating a transducer installation (or installations) in the field consists primarily of following six interrelated components, an overall field operation plan must be developed that integrates all of these components:

a) The optimum frequency of visits to a site depends on the type of instrumentation being used and the accuracy required in the study. The use of data loggers without supplemental data storage modules or telemetry can limit the length of time between field visits.

b) The frequency and types of field checks also are based on the type of instrumentation being used and the needs of the study.

c) The data-retrieval method and equipment may dictate, to some extent, the frequency of visits.

d) The data-retrieval method depends, somewhat, on the instrumentation and study needs.

e) Field measurements used to verify instrument output may dictate the frequency of visits, as well as the method and frequency of data retrieval.

f) Appropriate field documentation is important for transducer calibration and calibration checks, for recording equipment malfunctions,

for recording changing site conditions, and for data computation.

After considering these components, and weighing their importance, a strategy for field operation can be implemented.

8.2 Frequency of Visits

Site visits should be scheduled on the basis of the study's needs, stability of the transducer, and storage limitations of the recording device. For example, for a study involving long-term monitoring of ground water levels, visits may be routinely scheduled at 4-8 week intervals. This visitation frequency will usually provide enough verification measurements to document transducer drift over time and over a range in water level. Visit the site frequently enough so that the primary and back-up recording devices will not run out of storage memory. On the other hand, a short-term study, such as an aquifer test, requires the operator to be on-site continuously to make frequent verification measurements and instrument checks.

8.3 Field Checks

During field site visits, check the instrumentation and recording system, and verify the operation of the power supply, transducers and other sensors. One simple set of checks includes comparing the voltage from the solar panel or ac trickle charger to the voltage from the regulator to the battery and comparing the voltage of the power supply to the voltage present at the instrument port on the recording device. Inspect the condition of the suspension system, well casing, and instrument shelter. If the suspension system shows signs of slippage, measure the amount of movement of the mark that has occurred and correct the data accordingly. Excessive slip can damage the vent tube or cable, or both, which can result in faulty or lost data, or damage to the transducer. Damage to the well casing can cause a change in the measuring point, or may indicate possible damage to the transducer or its cable. Damage to the shelter that could expose the enclosed instrumentation to the weather needs to be repaired as soon as possible.

Observations of land use, or changes in the general area of the site can be important for data analysis, record computation, and data interpretation. These observations could be notes on land-use changes, construction of new wells nearby, notes of flowmeter readings from production wells, mention of known floods or earthquakes that occurred since the last visit, or any other item that might have a bearing on data collection.

8.4 Data Recording and Retrieval

The study's data needs determine the recording frequency for each parameter. Record each parameter or nearly simultaneous group of parameters with the date and time to prevent many hours of file manipulation and editing as well as potential misinterpretation of the location of gaps in the data. Battery voltage and temperature are valuable ancillary data. In some types of data loggers, failure to maintain the appropriate battery voltage can cause permanent loss of the recorded data or the data logger program. Excessive shelter temperature, in particular, adversely affects the operation of the data logger and power supply.

Electronic data can be retrieved in several ways, both remotely and on-site. Remote retrieval or transmission can be accomplished with satellite data collection platforms, radio transmitters, and telephone modems. Data can be retrieved on-site by using a portable computer with data retrieval software, by downloading data from a data logger to a back-up storage device, or by exchanging a fresh storage device (data storage module or data flash card) for the one at the site, or by a combination of these techniques. The fact that the technology in this area is advancing rapidly precludes a detailed discussion of these systems.

The ground water inspection sheet shown in Fig. 7 was designed for multiple well sites and data loggers that record multiple channels. Commonly a data logger has two types of data storage, temporary and permanent. Temporary storage is used when the measuring frequency is greater than the recording frequency. For example, the data logger may be reading sensor output every 5 min, but recording only hourly values. By recording both sets of values, the person servicing the well can see a more frequently updated transducer value for comparison with a measured water level. For instance, if water level were changing quickly, an hourly reading by the data logger would not be adequate for comparison with the actual water level measurement made by the field person unless it were made just after the hour. Remember that the purpose of making a physical measurement is to compare it with the sensor output to determine drift or calibration corrections.

The inspection form also contains a place to record the raw sensor output from the data logger, as well as the value converted to units of measurement (metres, feet). A project may have a policy of recording actual sensor output (mV, mA, kPa, psi) rather than converting the value to a measurement unit in the data logger program itself. There are several advantages to this policy when troubleshooting system problems, looking at sensor performance, and determining whether the sensor is within its operating or calibration ranges. This

Site Name:_____ Station ID number:_____

State/Local well Numbers:_____ Party_____

Date (mm/dd/yy/: ___/___/___ Julian: ___/___/___ Watch time: ___/___/___ Daylight Atomic (circle)

Data Logger Information:

Date (mm/dd/yy/: ___/___/___ Julian: ___/___/___ Time: ___/___/___ Daylight Atomic (circle)

Data Logger Type:_____ Serial No._____

Temporary Storage Values: Time:_____ Daylight Atomic (circle) Data Block No._____

CH 1_____ CH 2_____ CH 3_____ CH 4_____ CH 5_____ CH 6_____ CH 7_____

CH 8_____ CH 9_____ CH 10_____ CH 11_____ CH 12_____ CH 13_____ CH 14_____

CH 15_____ CH 16_____ CH 17_____ CH 18_____ CH 19_____ CH 20_____ CH 21_____

CH 22 CH 23 CH 24 CH 25 CH 26 CH 27 CH 28

Permanent Storage Values: Time:_____ Daylight Atomic (circle) Data Block No._____

CH 1_____ CH 2_____ CH 3_____ CH 4_____ CH 5_____ CH 6_____ CH 7_____

CH 8_____ CH 9_____ CH 10_____ CH 11_____ CH 12_____ CH 13_____ CH 14_____

CH 15_____ CH 16_____ CH 17_____ CH 18_____ CH 19_____ CH 20_____ CH 21_____

CH 22_____ CH 23_____ CH 24_____ CH 25_____ CH 26_____ CH 27_____ CH 28_____

Channel	CH #	CH #	CH #	CH #	CH #	CH #	CH #	CH #
Well No.	Well	Well	Well	Well	Well	Well	Well	Well
M.P. used								
Hold								
Cut								
Water Level below M.P.								
M.P. to Land Surface								
Water Level to Land Surface								
Mean Time (watch)								
Logger Value								
Converted Logger Value								
Parameter Shift								

FIG. 7 EXAMPLE OF GROUND WATER TRANSDUCER INSPECTION SHEET

sheet provides a place to document the sensor output and then, using the calibration equation developed for the specific transducer, document the associated converted value.

Retrieving data while in the field involves following number of steps that are performed in a certain order:

a) Ensure that the sensors and recording devices are operating properly.

b) Use field measurements to verify the sensor output values.

c) Document the visit, all measurements, and any problems on a standard ground water inspection sheet (*see* Fig. 7).

d) Retrieve the data and document the process using a field inspection form for data retrieval.

e) Review the retrieved data by viewing the file or plotting the original data.

f) Recheck the operation of the sensors and recording devices prior to departing the site.

8.5 Verification

Because verifying the sensor output is crucial to determining the validity of recorded data, it must be done routinely in the field. Measure ground water levels using a steel tape or calibrated electric tape. At a minimum, verify the instrument output each time data are retrieved at the site, but verification measurements also are recommended during visits when data are not retrieved. In either case, the verification measurements should be compared with the output from the site's instrumentation at the time of the measurement. Verification measurements, commonly referred to as calibration checks, are necessary for troubleshooting, drift determination, and data correction during office computation.

Field verification measurements of ancillary data also can be useful in determining data integrity. These data might include the output of voltage from the power supply, barometric pressure, shelter temperature and outside air temperature, all of which should be compared with the recorded values. These checks serve as an alert to a variety of potential problems and will help prevent loss of data or instrument damage.

8.6 Use with Data Loggers

Data may be collected in different formats. Some hydrologists prefer to collect raw data from the pressure transducer and convert the data in the office. Others prefer to collect data in a format identical to the units used during field calibration checks. Another option is to program the data logger to provide water level elevations. Whatever the preference, maintaining a record of adjustments to the data, whether they occur in the data logger program or in the office, is essential. Data loggers can be programmed in a multitude of ways that allow project specific or site specific data formats.

8.7 Field Documentation

Use a field note with a checklist of steps and measurements to record all field observations and the current data from the data logger. It provides a historical record of field activities.

Keep a log for the site in the instrument shelter. The log serves as a troubleshooting aid, as a quick historical reference to water level trends and equipment problems, and as a long-term record of changes and occurrences at the particular site. At each site, keep a printed copy of the data logger program being used in the instrument shelter.

In the office, maintain a binder with field information similar to that recorded on the site log so that a general historical record is available there and can be referred to before and after a field trip. Other information to be included are site descriptions and road logs, transducer ratings, programming instructions, and phone numbers and addresses of important contacts.

8.8 Maintenance

In addition to data retrieval and field check measurements performed upon each field-site visit, routine maintenance of the transducer equipment, power supply, shelter, site, and well should be performed to ensure satisfactory long-term operation. Transducer equipment and power supply maintenance shall be guided by the manufacturers' instructions and the general concepts outlined in this standard. The shelter should be maintained to ensure its functionality to protect equipment from adverse weather conditions, vandalism, and insect or animal damage. Vegetation at the site should be trimmed to maintain easy access and to prevent interference with activities. All possible precautions should be used to prevent objects and material from falling into the well and interfering with the operation and retrieval of the down-hole equipment.

It is possible for encrustation, infilling, or casing collapse to, overtime, reduce or completely obstruct the hydraulic connection of the well to the aquifer. The functionality of this connection needs to be periodically tested by pumping the well and observing the water level recovery. This may be accomplished qualitatively by anticipating a relatively fast recovery or quantitatively by using aquifer test methodology with parameters that are appropriate for the aquifer at that locale to calculate the time for recovery. Water level recovery that is slower than that anticipated may indicate a connection problem. For normal circumstances, testing at 5-year intervals will provide a satisfactory assurance of connectivity.

9 DATA PROCESSING

9.1 General

After retrieving the recorded data in the field, the data must be processed and loaded into a database. A recommended sequence for processing data is:

a) to archive the raw data,

b) to convert the data into a usable format, and

c) to load the formatted data into an appropriate database.

The raw data should be permanently archived prior to

any alteration of the data set. After the data have been loaded into the database, they can be manipulated appropriately during the records computation process, as described below.

9.2 Adjustments

The first step, if necessary, is to convert pressure data to water level data.

The second step is to apply corrections obtained from field verification measurements. If the record is faulty due to instrumentation or other problems, corrections usually cannot be applied. In general, a missing or faulty record of ground water level cannot be estimated reliably. Three types of corrections can be applied to the record: (a) datum corrections; (b) drift corrections; and (c) calibration corrections. Use time proration for the first two types of corrections. Apply a datum correction when a change has occurred to the elevation of the measuring point of the well. Keep a level summary sheet with the site's permanent file to document reference elevation changes. A hung depth correction can be applied if the position of the transducer changes relative to its original position, due either to purposeful or accidental raising or lowering of the transducer in the well, or to changes from other causes, such as, an earthquake. A drift correction usually a linear proration with time — is applied to compensate for drift in the transducer's offset calibration.

9.3 Documentation

The third and final step of record computation requires documenting and explaining in a station analysis how all conversion equations and other corrections were applied. The station analysis (*see* Fig. 8), written periodically after the final record is produced, should be kept with the permanent data file, along with the record computations, field notes, archival and data conversion notes, data tables, and other pertinent information.

Data processing requires a systematic, well-planned process fully integrated with field procedures. The raw data must be corrected systematically and consistently, and then documented in the station analysis that will be included with the permanent record.

GROUND WATER STATION ANALYSIS 1993 WATER YEAR
LOCAL NAME: Edwards Site
STATION: 345 001 117 500 101 09N/09W-28A001S

RECORDS — Ground Water Level, Depth Below Land Surface Datum, in metres

EQUIPMENT — A Campbell CR-10 datalogger and storage module are used to record and store the data for this site. The water level sensor for well 28A1 is a Design Analysis H-300 submersible transducer. The calibrated range for the sensor is 0 to 35 kPa (5 psi), and can withstand excessive pressures up to 2 times the factory calibrated range. The equipment is powered by a 12 volt battery system charged by a solar panel. The recording equipment is housed in a heavy duty metal shelter. The shelter is insulated and ventilated to protect the equipment from high humidity and temperature extremes. The humidity is a result of evaporation from the wells as well as from the periodic flooding of the lakebed under the shelter. The shelter was installed about 0.36 m (14 inches) above the lakebed on two large wooden beams that are mounted on concrete piers. In addition, there is a tipping bucket rain gauge installation about 6 m (20 ft) from the main shelter. The dry air systems for the water level transducers at this site are housed in a heavy duty fiberglass instrument box, mounted on a vertical steel pole. The pole is attached to the 200 mm (8 inches) diameter steel pipe casing which provides protection for four of the five 50 mm (2 inches) PVC pipes that comprise the nested piezometers for this location. The piezometers and transducers are vented to atmospheric pressure.

WATER LEVEL RECORD — Instrumentation was installed on July 29, 1992. Ground water level record began on July 30, 1992. Prior to this date, periodic water level measurements were made. The hourly ground water level record is complete for the entire 1993 water year. Data is recorded to Pacific Standard Time year round.

DATUM CORRECTIONS — None needed. Land Surface Datum for this site is 692.23 m (2 271.08 ft). Land Surface Datum was obtained from the results of level surveys run during the month of June 1991.

DRIFT CORRECTIONS — The drift of the transducers' calibration was corrected by use of the datum corrections option in the California District ADAPS data processing system. Corrections were determined on-site by comparing the recorded values with a verification measurement of DBLS. Verification measurements were obtained using a calibrated electrical tape. The measurements are considered to be reliable within – 0.01 m (0.02 ft). Corrections were applied by time from one measurement to the next.

Corrections were applied as follows:

Date	Correction in m (ft)	Remarks
09/14/92	–0.02 (–0.05)	Last correction of previous year
10/28/92	+0.01 (+0.02)	Measurement correction
12/17/92	–0.03 (–0.09)	”
01/22/93	–0.03 (–0.10)	”
03/11/93	–0.03 (–0.10)	”
04/22/93	–0.04 (–0.12)	”
06/02/93	–0.04 (–0.13)	”
07/15/93	–0.04 (–0.13)	”
08/26/93	–0.04 (–0.13)	”
09/30/93	–0.03 (–0.11)	End of year correction, based on the measurement made 10/06/93

HYDROLOGIC CONDITIONS — Well 28A001 is one of four nested piezometers and one single piezometer at this location. The accompanying piezometers are 28A002, 28A003, 28A004, and 28A005. Ground water levels in well 28A003 and 28A005 are also recorded. The other two are measured periodically, and do not have recording equipment. The 28A001 piezometer has a depth of 230 m (755 ft) and is screened from 224 m (735 ft) to 227 m (745 ft). The water level in this piezometer is affected by pumping from production wells located nearby.

This site is located at Edwards, California, near the southeast end of Rogers Lake playa. The air temperature varies from extreme heat in the summer to below freezing temperatures in the winter. A steady, strong wind blows predominantly from the WSW during fair weather, but can come from other directions during the passage of storm systems. There are frequent dust storms and occasional thunderstorms. This well was drilled specifically for observation purposes.

CONVERSION EQUATION — An equation was developed and used to convert the raw pressure values to Depth Below Land Surface. The equation is applied in the data base, where the data are computed and stored. The following equation, in use at the end of last year, was used again this entire year to compute the record of Depth Below Land Surface.

From October 1, 1992 through the End of the Water Year: DBLS in m = 30.576 3 + (–0.101 97 x kPa) [DBLS in ft = 100.316 + (–2.306 67 x psi)]

The equation was determined by applying a multiplier that converts the psi output into feet of water above the transducer, then adding an offset which corresponds with the water level measurement and transducer output at the time of installation and calibration of the transducer. The data collected at the time of transducer installation and calibration was affected substantially by displacement of the water column in the piezometer while the transducer was raised and lowered. Therefore, the incremental calibration data were not used in obtaining the conversion equation shown above.

WATER LEVEL SUMMARY — Ten ground water level measurements were made this year. Nine of the ten measurements had corresponding readings of transducer output noted. Measurements were made using a calibrated steel tape, or calibrated electric tape. Minimum depth to water surface measured was 28.09 m (92.15 ft) below land surface datum on March 11, 1993. Maximum depth to water surface was 29.06 m (95.34 ft) below land surface datum on October 6, 1992. Recorded minimum and maximum were 27.96 m (91.72 ft) and 29.11 m (95.49 ft) on March 14 and September 15, respectively. Water levels and other pertinent well information are stored in the database.

REMARKS — Record is considered good. Purpose of record is to obtain data for ongoing geohydrologic studies being conducted at Edwards, California.

FIG. 8 EXAMPLE OF A GROUND WATER RECORD STATION ANALYSIS

ANNEX A
(*Clause* 1.3)

PRESSURE TRANSDUCERS — CHARACTERIZATION, COMMON PROBLEMS AND SOLUTIONS

A-1 PRESSURE TRANSDUCER CHARACTERIZATION

A-1.1 General

Pressure transducers are characterized by their mechanical and electrical transduction elements, the performance specifications of the transducer, and the interaction of the transducer with the other components of the measuring system (such as, the power supply and data logger).

A-1.2 Types of Pressure Measurements

A-1.2.1 *Absolute Pressure*

Absolute pressure is measured in reference to a vacuum or zero pressure. Pressure at sea level is 1 atmosphere, 101.3 kPa, or 14.70 psi. Pressures measured by an absolute pressure transducer are always positive because these devices are referenced to a perfect vacuum in which absolute pressure is zero. Zero referencing is accomplished by completely evacuating and sealing the interior or reference side of the transducer.

A-1.2.2 *Gauge Pressure*

Gauge pressure is measured in reference to atmospheric pressure at mean sea level. Pressures measured by a gauge pressure transducer are positive for pressures greater than sea level pressure and negative for pressure less than sea level pressure. Thus, atmospheric pressure measurements above sea level datum are negative because atmospheric pressure decreases with altitude. Sea level referencing is accomplished by sealing the interior or reference side of the transducer to atmospheric pressure at sea level. The term gauge pressure is sometimes used to describe pressure measurements referenced to ambient atmospheric pressure other than to sea level. The relation between absolute pressure and gauge pressure is given in Fig. 9.

A-1.2.3 *Differential Pressure*

Differential pressure is measured with respect to a varying pressure reference, such as, ambient atmospheric pressure or some other pressure source that is, allowed to vary independently of the primary measurement. Pressure transducers constructed in this manner actually sense the difference between two independent pressure sources simultaneously. The output of the differential pressure transducer is proportional to the pressure difference between the two independent sources. Pressure measurements made with open-ended manometers or vented submersible pressure transducers are examples of differential measurements.

A-1.2.4 *Sealed Reference Pressure*

Sealed reference pressure is measured with respect to a sealed reference pressure other than atmospheric

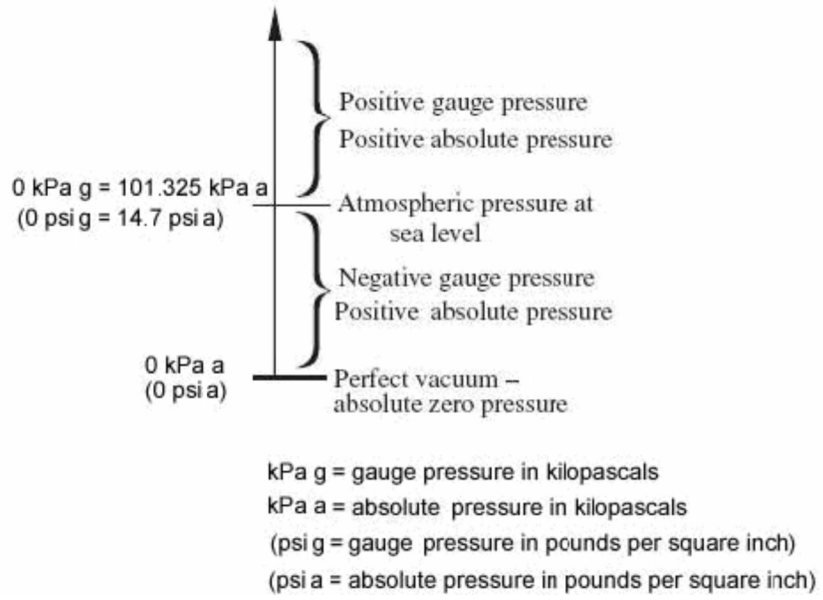

FIG. 9 DIFFERENCE BETWEEN ABSOLUTE PRESSURE AND GAUGE PRESSURE

pressure at sea level. A sealed reference pressure is created by evacuating (pressuring down) or pressuring up the interior or reference side of the transducer to a prescribed absolute pressure. Because the sealed reference side contains a constant volume of gas, the transducer must be maintained at a constant temperature to avoid changes in the reference pressure.

A-1.3 Common Pressure Units Used in Hydrology

Pressure unit conversion factors commonly used in hydrology are listed in Table 1. Take care when applying these conversion factors. Pressure expressed in terms of mercury (Hg) or water (H_2O), for example, depends on the specific gravity or density of the fluid, which is temperature dependent. In the case of water, the effects of total dissolved solids and suspended solids (turbidity) on density also must be considered when quoting pressure head in terms of length.

A-1.4 Basic Types of Transducers for Measuring Pressure

A-1.4.1 *General*

A transducer is a device that converts energy from one form to another. Electrical pressure transducers, which measure changes in pressure, consist of a mechanical transduction element or force-summing device coupled to an electrical transduction element, which is connected to a display or recording device or both. There are two types of electrical transduction elements: active and passive. Electrical transduction elements that convert pressure-induced mechanical changes directly to an electrical signal are referred to as active transducers. Passive transducers require an external excitation that causes the transducers to respond to pressure-induced mechanical changes. The electrical transduction element converts mechanical energy into electrical energy and the force-summing device or mechanical transduction element converts gas or liquid energy into mechanical energy.

Many types of pressure transducers consist only of mechanical transduction elements. Open ended and closed ended manometers, barometers that record changes in the height of a column of liquid in response to some external pressure change, and spring-loaded pressure-sensing devices are examples of mechanical transducers.

Electrical pressure transducers are classified primarily on the electrical principle or method of electrical transduction involved in their operation. Different electrical transduction elements can be coupled to a variety of force-summing devices. Some combinations work better than others, depending on the application and measurement needs. Commonly used types of force-summing devices are illustrated in Fig. 10. A piezoelectric pressure transducer incorporating a diaphragm in the housing is illustrated in Fig. 11.

Electrical pressure transducers using force-summing devices are described in **A-1.4.2** to **A-1.4.7**. The most common of the many types of pressure transducer is the strain-gauge pressure transducer.

A-1.4.2 *Piezoelectric Transducer*

The piezoelectric transducer is an example of a self-generating or active pressure transducer. The design of this type of transducer is based on the ability of certain crystals (quartz, tourmaline, Rochelle salt, or ammonium dihydrogen phosphate) and ceramic materials (barium-titanate or lead zirconate-titanite) to generate an electrical charge or voltage when mechanically stressed. The crystal geometry of these materials is oriented to provide maximum piezoelectric response in one direction and minimal response in other directions. The transducer develops a voltage proportional to the change in pressure. These transducers cannot be calibrated using normal static-pressure calibration techniques. This type of transducer is used to measure rapidly fluctuating pressures.

A-1.4.3 *Capacitive Transducer*

A capacitive transducer employs a diaphragm positioned between two fixed metal plates (*see* Fig. 12). In some designs, the metal plates are fixed to either side of the diaphragm; deflection of the diaphragm changes the capacitive coupling between the diaphragm and the metal plates. In other designs, the metal plates are isolated from the moving diaphragm; deflection of the diaphragm causes a change in the capacitive coupling between the two metal plates. An alternating current (ac) signal across the plates can be used to sense the change in capacitance.

A-1.4.4 *Inductive and Reluctive Transducers*

In an inductive transducer, pressure induced displacements of a diaphragm cause a change in the self-inductance of a single coil. In a reluctive transducer, displacements occur in the magnetic coupling between a pair of coils. An inductive transducer is active and operates on the principle that the relative motion between a conductor and a magnetic field induces a voltage in the conductor (*see* Fig. 13). Because the pressure induced electrical output signal requires relative motion, the inductive design is limited to dynamic measurements.

In a reluctive transducer, displacements occur in the magnetic coupling between a pair of coils. A reluctive transducer is passive and requires external ac excitation of a pair of coils. It operates on the principle that the magnetic coupling between the two coils is affected by the displacement of a pressure-driven conductor

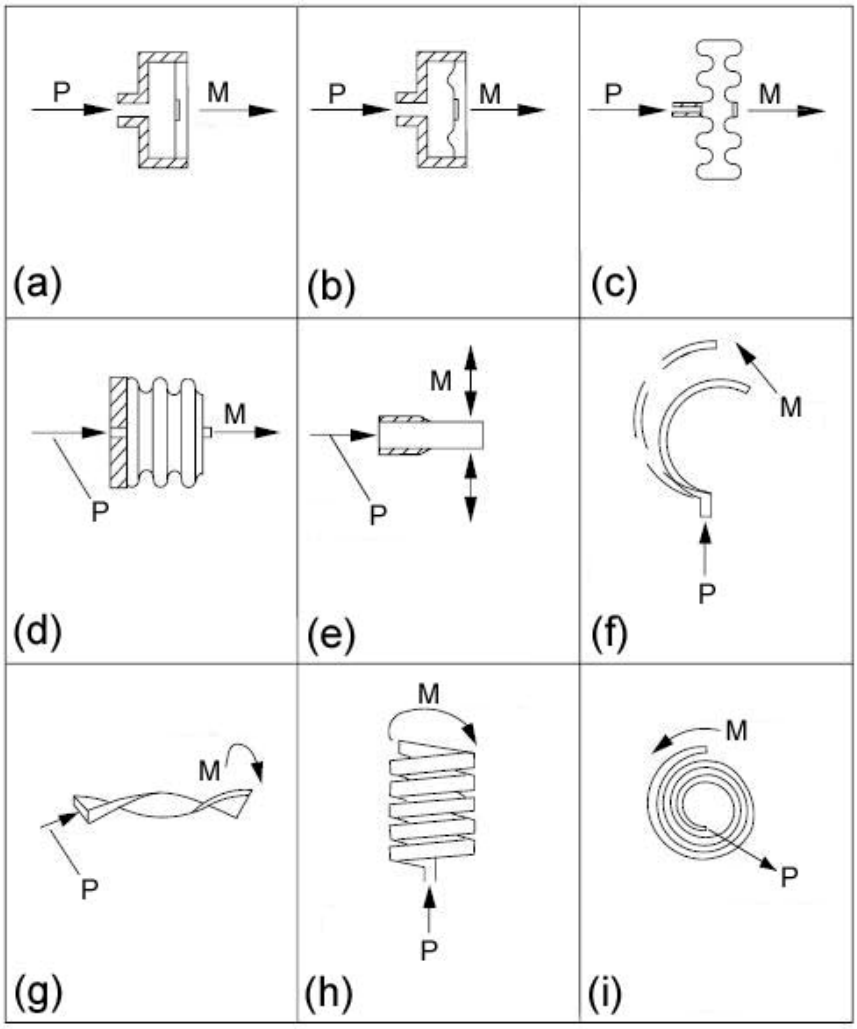

Key

P pressure
M motion

(a) Flat diaphragm
(b) Corrugated diaphragm
(c) Capsule
(d) Bellows
(e) Straight tube
(f) C-Shaped bourdon tube
(g) Twisted bourdon tube
(h) Helical bourdon tube
(i) Spiral bourdon tube

FIG. 10 EXAMPLES OF DIFFERENT TYPES OF FORCE-SUMMING DEVICES

located in the magnetic field between the two coils. The conductor is either connected to a force-summing device or is itself a force-summing device. Two basic designs have evolved (*see* Figures 13 and 14).

A-1.4.5 *Potentiometric Transducer*

The potentiometric pressure transducer consists of a movable contact driven by an active force-summing device (*see* Fig. 15). The movable contact, or wiper, travels across a resistive element that may be a wire wound coil, a carbon ribbon, or a deposited conductive film. The motion of the wiper across the resistive element causes a change in the resistance selected by the wiper. The change in resistance produces an electric signal (either a change in voltage or current), that is, proportional to the mechanical displacement of the wiper. This type of transducer may be excited using either ac or dc.

A-1.4.6 *Vibrating Wire and Vibrating Cylinder Transducers*

Vibrating wire (*see* Fig. 16) and vibrating cylinder (*see* Fig. 17) transducers use a vibrating element, either a fine wire or a cylinder that forms a portion of one leg

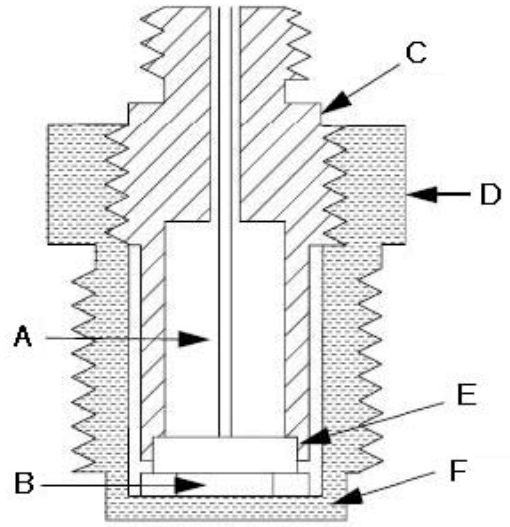

Key

A	lead wire	*D*	housing
B	disc	*E*	crystal
C	nut	*F*	diaphragm

FIG. 11 PIEZOELECTRIC PRESSURE TRANSDUCER USING A DIAPHRAGM AS A FORCE-SUMMING DEVICE

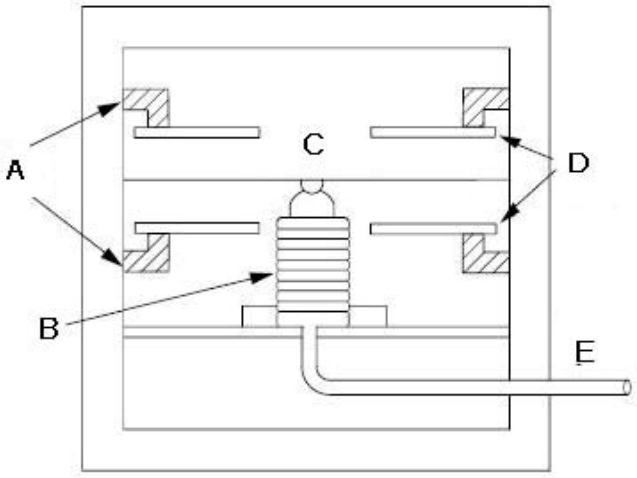

Key

A	insulated standoffs	*D*	capacitor plates
B	pressure bellows	*E*	pressure port
C	diaphragm		

FIG. 12 CAPACITIVE PRESSURE TRANSDUCER USING A BELLOWS AS A FORCE-SUMMING DEVICE

of a Wheatstone bridge circuit. The vibrating element is located in a magnetic field with one end of the element attached to a diaphragm or other type of force-summing device. Current flowing through the vibrating element causes the element to move in the magnetic field, which in turn induces a current in the element. The resulting voltage, amplified and fed back to the vibrating element, sustains the oscillations at the element's resonating frequency. The resonating frequency of the vibrating element is controlled by the tension exerted on the wire or cylinder by a diaphragm or other force-summing device. Vibrating wire transducers can be installed in small diameter [1.27 cm (0.5 inch)] wells, and because they produce ac signals,

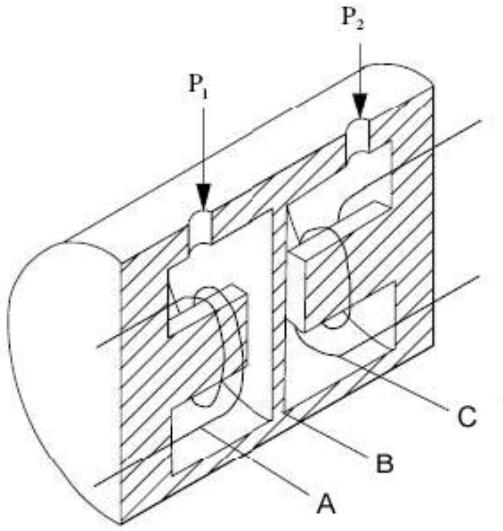

Key

P	pressure	*B*	diaphragm
A	coil L_1	*C*	coil L_2

FIG. 13 INDUCTIVE (ACTIVE) PRESSURE TRANSDUCER USING A DIAPHRAGM AS A FORCE-SUMMING DEVICE

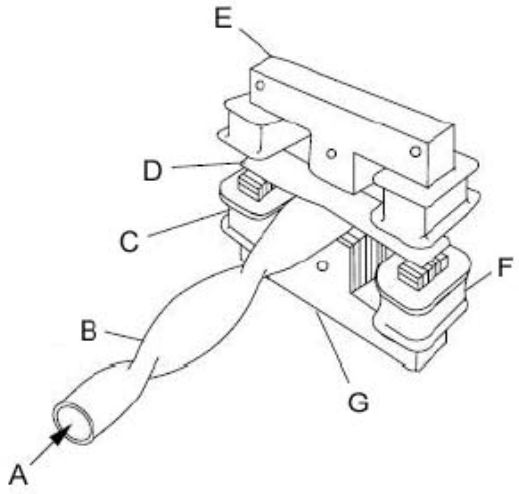

Key

A	pressure	*E*	additional coil-core set (optional)
B	twisted bourdon tube	*F*	coil L_2
C	coil L_1	*G*	magnetic 'E' core
D	armature		

FIG. 14 RELUCTIVE (PASSIVE) PRESSURE TRANSDUCER USING A BOURDON TUBE AS A FORCE-SUMMING DEVICE

they can be used on long wires with little signal degradation.

A-1.4.7 *Strain Gauge Transducer*

A-1.4.7.1 *General*

The strain gauge transducer, sometimes referred to as a resistive transducer, is by far the most widely used type of pressure transducer. Its electrical transduction elements operate on the principle that the electrical resistance of a wire is proportional to its strain-induced length. The strain gauge transducer uses the gauge factor property of the strain element to convert a

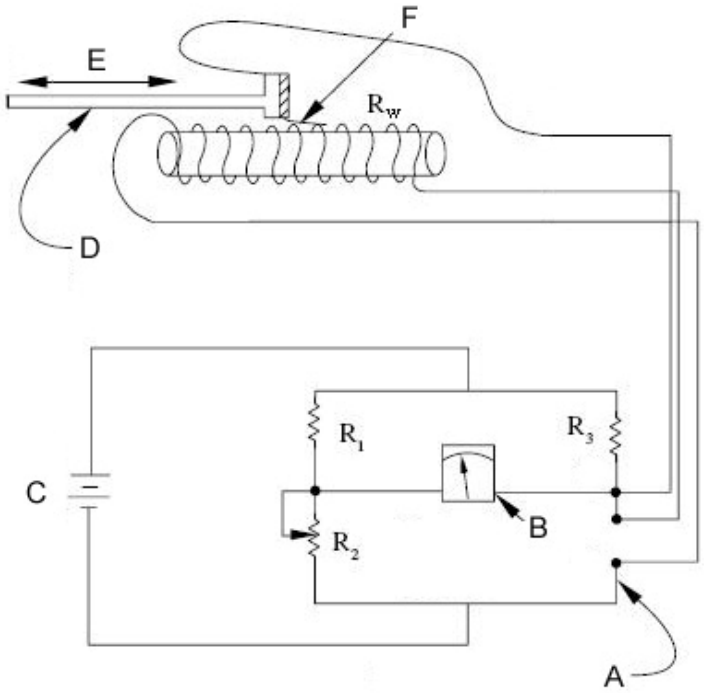

Key

A	resistance-measuring bridge circuit	*E*	displacement
B	measurement proportional to pressure	*F*	wiper or movable contact
C	bridge power supply	R_w	resistance that varies with movement of *D*
D	moveable arm of pressure element	R_1, R_2, R_3	known resistances

FIG. 15 POTENTIOMETRIC PRESSURE TRANSDUCER AND RESISTANCE MEASURING CIRCUIT

mechanical displacement into a change in the electrical resistance of a circuit. The gauge factor (F_G), defined as the unit change in resistance (R) per unit change in length (L), is expressed as:

$$F_G = \frac{\Delta R / R}{\Delta L / L} \quad \text{....(A.1)}$$

Product specification sheets rarely provide gauge factors. Instead, they commonly express pressure-transducer sensitivity as the voltage signal output ratio per unit of pressure change: $\Delta V/V$ per unit of pressure change.

A-1.4.7.2 *Classes of strain gauge transducers*

A-1.4.7.2.1 *Unbonded strain gauge transducers*

There are basically two classes of strain gauge transducers: unbonded and bonded.

The unbonded strain gauge uses a strain-sensitive wire (or wires) with one end fixed and the other end attached to a movable element. Strain, induced on the wire by the displacement of the movable element, produces a change in resistance proportional to the displacement of the movable element. The basic design of this type of transducer is given in Fig. 18.

A-1.4.7.2.2 *Bonded strain gauge transducers*

Bonded strain gauge transducers (*see* Fig. 19) can be grouped into,

a) those that require an adhesive to fix the gauge to the pressure sensing element (metal foil and strain sensitive wires); and
b) those attached to the strain sensing element by techniques that effectively make the strain gauge an integral part of the strain sensing element (thin film and semiconductor).

Metal foil and strain sensitive wires commonly are mounted on a secondary sensing element, which acts as the deforming member to produce the strain sensed by the strain gauge.

Thin film and semiconductor strain gauges typically are mounted directly on the pressure sensing element.

Metal foil strain gauges consist of wire or foil ribbon coated with a thin layer of insulation and cemented to the strain sensing element. Distortion of the strain sensing element is communicated by the bonding

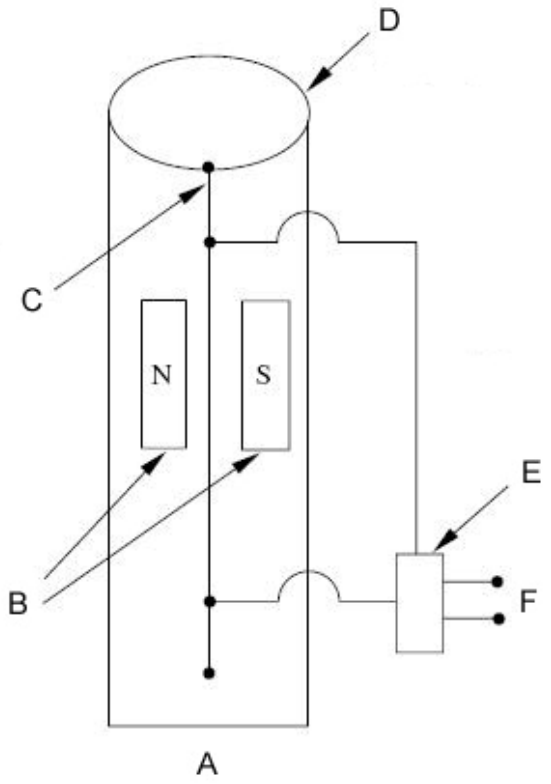

Key

A	vibrating wire
B	magnets
C	taut magnetic wire
D	pressure sensing diaphragm
E	ac carrier and frequency detector electronics
F	output

FIG. 16 VIBRATING WIRE PRESSURE TRANSDUCER

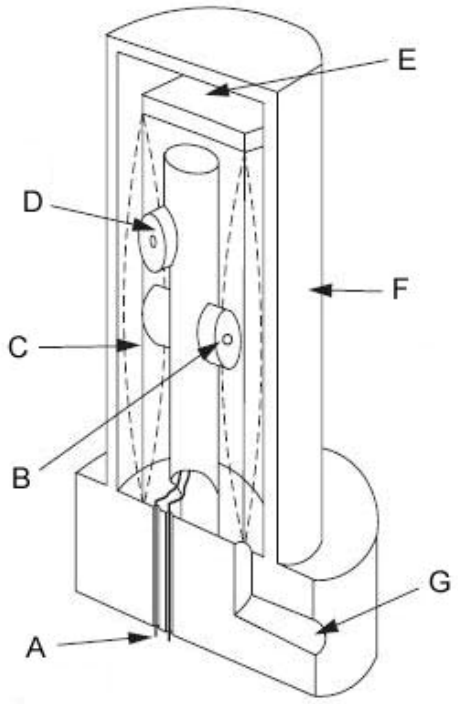

Key

A	frequency signal-pressure
B	magnetic pick-up coil
C	vibrating cylinder element
D	magnetic drive coil
E	evacuated reference space
F	outer protective cylinder
G	pressure inlet

FIG. 17 VIBRATING CYLINDER PRESSURE TRANSDUCER

material directly to the wire or foil filaments. Increasing the length of the gauge reduces the cross-sectional area of the conductor and increases the conductor's resistance, causing a change in voltage proportional to the pressure change across the output leads.

Thin film strain gauges employ a metal substrate on which are deposited thin films as an insulation layer and a resistor layer, using either a vacuum deposition or sputtering process. The strain gauge is either masked onto or etched into the thin film resistor layer, making the gauge an integral component of the strain sensing element. The strain gauge can be deposited directly onto sensing elements of any configuration, such as, diaphragms, beams, or tubes.

Semiconductor strain gauges are similar to the thin film strain gauges in that the strain gauge circuit is an integral part of the strain member. In integrated silicon strain gauge pressure transducers, the strain elements are diffused directly into the pressure sensing element, becoming automically bonded to the sensing member. Because silicon is virtually 100 percent elastic to the breaking point, this type of transducer exhibits very little hysteresis. Because gauge factors in these types are in some cases more than 50 times greater than those of wire gauges, signal output is high, which commonly eliminates the need for signal amplification.

The Wheatstone bridge is one of the most common bridge configurations for strain gauge pressure transducers. In its simplest form, the basic Wheatstone bridge consists of four resistors arrayed to form a closed loop, a pair of sensing leads, and a pair of excitation leads. The bridge is affixed to a pressure sensitive diaphragm or substrate. Pressure changes distort the substrate or diaphragm and cause the resistance of the bridge to change in response to strain induced on its resistors. In some designs, all bridge elements may be active, while in other designs only one element may be active.

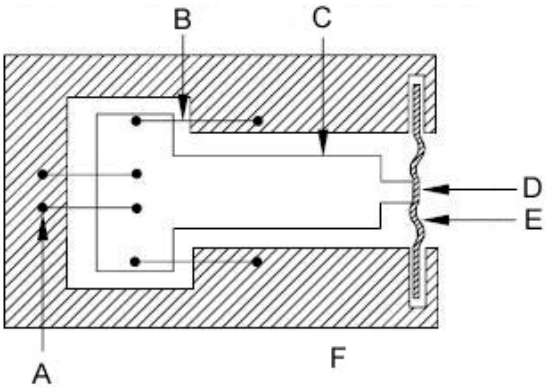

Key

A	electrically insulated pins
B	strain-sensitive wires
C	moveable armature
D	applied pressure
E	clamped elastic element
F	fixed frame

FIG. 18 UNBONDED STRAIN GAUGE

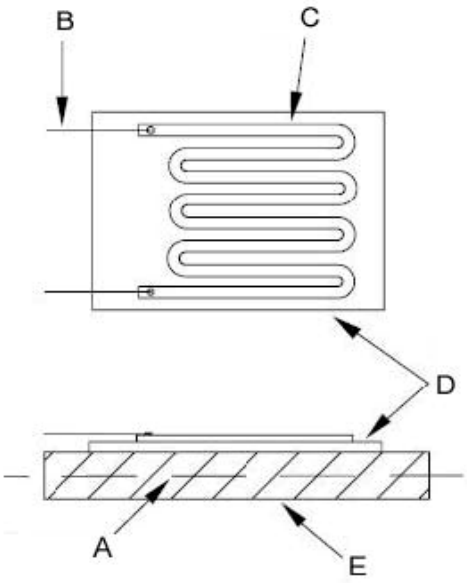

Key

A	neutral axis
B	terminal wire
C	foil pattern
D	insulating layer and bonding cement
E	structure undergoing strain

FIG. 19 BONDED STRAIN GAUGE

Variations on the basic configuration of the Wheatstone bridge are referred to as compensated Wheatstone bridges. These variations include additional resistor circuits, diodes, and circuit components designed to provide various types of compensation functions or signal enhancement capabilities, such as, zeroing, shunt calibration, temperature compensation, and sensitivity adjustments (*see* Fig. 20).

The strain gauge bridge may be excited by either a constant voltage or a constant current, depending on the application and the excitation method used for calibration. There are advantages to each method.

A-1.4.7.3 *Voltage*

Most manufacturers provide calibrations and transducer specifications using voltage as the mode of excitation. The length of the lead-wire (and hence its resistance) needs to be considered when selecting a transducer for a remote application. Short leads usually do not create significant measurement problems because the voltage loss on the excitation lead is small as a percent of the total excitation signal. The resistance of the lead increases as its length increases. The resistance of metric 8-gauge (AWG 20-gauge) annealed copper wire is approximately 0.033 Ω/m (0.01 Ω/ft). A transducer operated using a long wire lead should be calibrated with the lead attached. With a long lead, the voltage drop that develops across the sensing circuit is reduced in proportion to the resistance of the lead; the output signal will be reduced accordingly.

A-1.4.7.4 *Current*

Some transducers can be calibrated and operated using a constant current to supply excitation to the measurement bridge. The advantage of a constant current excitation is that the effects of lead-wire resistance can be eliminated and the necessity of calibrating each unit with the lead-wires attached can be avoided. Delivering a constant current to the device is achieved by allowing the voltage across the output leads to seek the necessary potential (within prescribed limits) required to make the current equal to the calibrated current setting. A current-generating source with the capability to regulate the voltage drop across the input leads is required to provide a constant current. Because current is controlled at the input end of the circuit, the same current will be present across the sensing circuit, provided there are no current leaks or shorts in the measuring circuit.

A-1.5 Understanding Pressure Transducer Specifications

Selection of a pressure transducer requires careful review of the literature from prospective vendors.

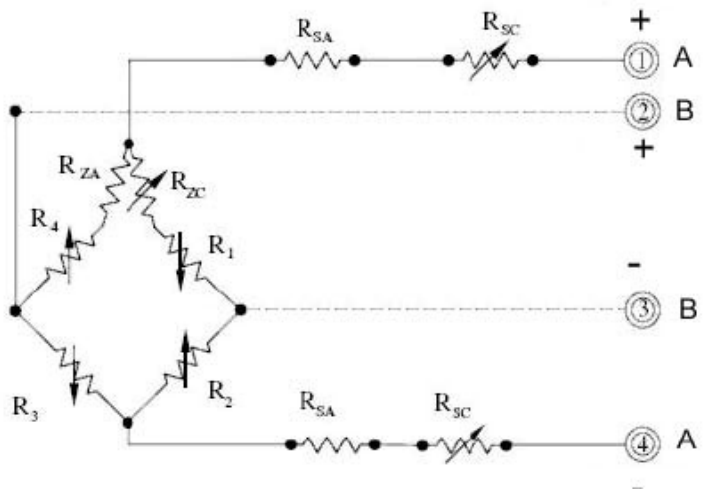

Key

A	excitation	R_{SC}	compensation for thermal sensitivity shift
B	output	R_{ZC}	compensation for thermal zero shift
R_{SA}	sensitivity adjustment	R_1 to R_4	resistance
R_{ZA}	zero balance adjustment		

FIG. 20 ELECTRICAL SCHEMATIC OF A COMPENSATED WHEATSTONE BRIDGE

Comparing instrument specifications is a difficult and time-consuming process. Vendors commonly specify different sets of parameters and, typically, it is not clear which definitions are being applied to properly interpret a stated specification. Confidence levels are rarely specified and reporting specifications vary from one manufacturer to another. When in doubt, the vendor or manufacturer should be consulted for clarification and additional information. When selecting a pressure transducer, carefully consider the specifications of the instruments that will be used to excite and measure the output of the pressure transducer. These components of the measuring system may be the limiting factor in meeting overall performance objectives. An analysis of the circuits may be helpful in selecting these instruments. The input and output characteristics of the transducer must be compatible with the excitation and recording system used. Terms frequently used to describe the performance characteristics of pressure transducers, such as, drift, error, error band, resolution, hysteresis and time constant are given in Figures 21 to 29.

Drift, an undesired change in output over a period of time that is not a function of the measurand, is normally specified as a change in zero (zero drift) over time and a change in sensitivity (sensitivity drift) over time. Zero drift is given in Fig. 21 as the vertical shift in the intersection of the best-fit straight line between the initial calibration and the later calibration. The sensitivity drift is shown by the difference in slope of the best-fit straight line between the initial calibration and the later calibration, where the initial calibration curve, adjusted for zero drift, is shown as the dashed line.

Error, the algebraic difference between the indicated value and the true value of the measurand, can be zero, span, or non-linear error (*see* Notes).

NOTES

1. Zero error is constant throughout the range of true values of the measurand (*see* Fig. 22).

2. Span error is an error that changes linearly with the value of the measurand (*see* Fig. 23).

3. Non-linear errors change as a non-linear function of the value of the measurand (*see* Fig. 24).

The error band is the band of maximum deviation of output values from a specified calibration curve or reference line. The sum of all the defined errors causes the measured values to differ from the true values. The measured values will fall within the error band, as shown in Fig. 25.

Hysteresis is the maximum difference in output, at any measurand value within the specified range, when the value is approached first with an increasing and then with a decreasing measurand. Expressed in percent of full-scale output, it is usually described in terms of maximum hysteresis in the output, as illustrated in Fig. 26.

The resolution of a measurement system is the smallest change in the measurand that can be measured or detected in the output reading. The ability to detect significant differences in output can be due to the

construction of the transducer, noise in the system, or the numerical resolution of a digital data logger. The definition of resolution is illustrated in Fig. 27.

The sensitivity of the transducer or system is the ratio of the change in transducer output (Δq_o) to a change in the measurand (Δq_i). Sensitivity may either be constant, in which case $\Delta q_o/\Delta q_i$ will vary linearly over the operational range of the transducer [*see* Fig. 28 (a)] or can vary non-linearly [*see* Fig. 28 (b)], in which case the sensitivity is commonly defined as a linear approximation for short segments of the curve.

The time constant is the length of time required for the output of a transducer to rise to 63 percent of its final value as a result of a step change in the measurand, as shown in Fig. 29. The time constant of a transducer is analogous to the time constant of an electrical circuit, in which the time constant is the time required for a capacitor charging through a resistor to reach 63 percent of the applied voltage.

A-2 COMMON PROBLEMS AND SOLUTIONS

A-2.1 General

Submersible pressure transducers generally require minimal maintenance, but problems can arise if they are not checked periodically. The following is a list of common problems and some suggested solutions to these problems. Occasionally, a problem can be solved only by replacing the transducer, but more commonly problems can be corrected in the field.

A-2.2 Leakage

Failure of submerged transducers commonly is caused by water leaking into the housing. Transducer leakage can appear in the data as an unexplained step or as measurements that cease, move out of range, or fluctuate wildly. Techniques to prevent leakage include the use of welded seals, O-ring seals, potted electronics and soldered contacts, sealed strain-relief fittings, and rubberized boots covering connections between the cable and the transducer's housing. Any of these components, however, can fail. Multiple layers of waterproofing, which can be user-tested, can prevent leakage, failure, and lost data (*see* Fig. 30). A double housing with an intervening chamber can be left pressurized so that if leakage occurs, dry air leaks into the water. Pressurize the chamber only slightly above the anticipated water pressure to prevent rupturing the seals. The chamber with strain-reliefs shown in Fig. 31 has been tested to a pressure of 35 m (115 ft) of water. In practice, the residual air pressure sometimes decays, allowing a small amount of leakage into the chamber. The inner housing then prevents that small amount of water from penetrating to the transducer. Chambers have been used without any leakage for more than five years. During one application in which two commercial transducers failed after only one month each in service, encasing the third commercial transducer in just the inner chamber produced 14 years of trouble-free data.

Commercial vented transducer cable must commonly be spliced. A waterproof splice can be made using

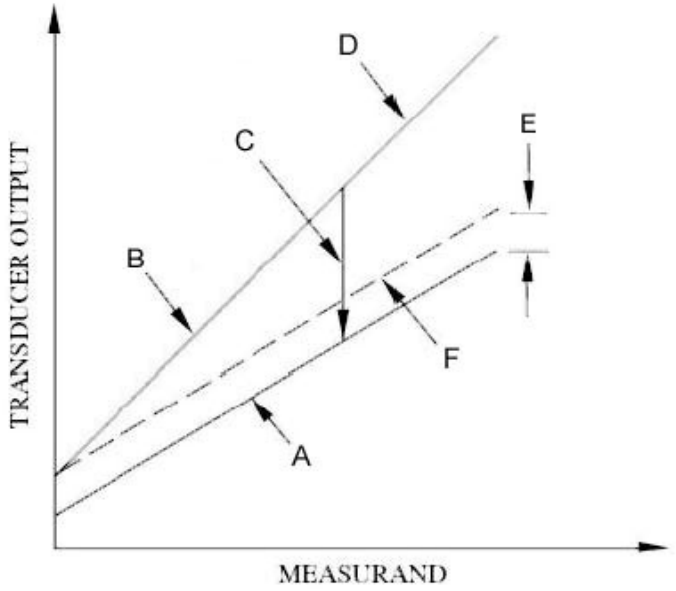

Key

A	best-fit straight line at initial calibration	*D*	best-fit straight line at later calibration
B	sensitivity drift	*E*	zero drift
C	total error due to drift	*F*	best-fit straight line after zero drift

FIG. 21 ILLUSTRATION OF ZERO DRIFT AND SENSITIVITY

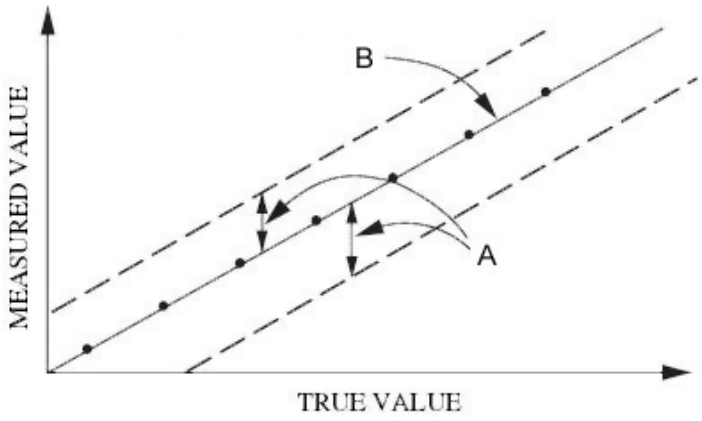

Key

A error caused by zero *B* best-fit straight line

FIG. 22 ILLUSTRATION OF ZERO ERROR

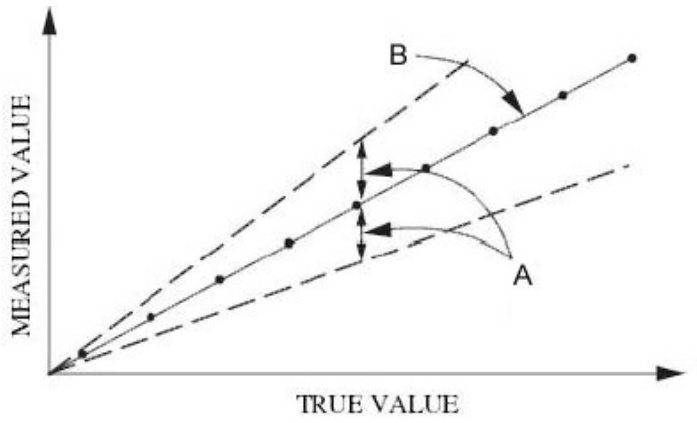

Key

A error caused by span *B* best-fit straight line

FIG. 23 ILLUSTRATION OF SPAN ERROR

strain reliefs and PVC pipe fittings (*see* Fig. 31). Connect the vent tubes with tubing of about the same diameter so that the cavity does not act as a pressure accumulator, restricting transmission of barometric pressure changes. For added security, the cable splice can be doubled in the same way as the pressurized housing shown in Fig. 30. Besides their primary functions of reducing well-bore storage, the drain-cleaner packer (*see* Fig. 1) and the drop pipe (*see* Fig. 2) both act as additional waterproof housings for pressure transducers. In waterproofing transducers, user experimentation and testing are essential. Providing additional waterproofing can greatly reduce the incidence of lost data.

A-2.3 Open and Short Circuits

The most frequent problems encountered when collecting water level data with a pressure transducer and data logger include open and short circuits. An open circuit can result in data floating erratically or resting at zero or the offset value. A short commonly results in data values that indicate an over-range condition for the data logger. Solutions are to check the connections of the wires to the data logger wiring panel (where shorts most commonly occur) and to check the wire for cuts, kinks, and abrasions. Tinning leads reduces the chances of short circuits from unattached wire strands and also prevents or reduces noise. Find short circuits by testing the resistance

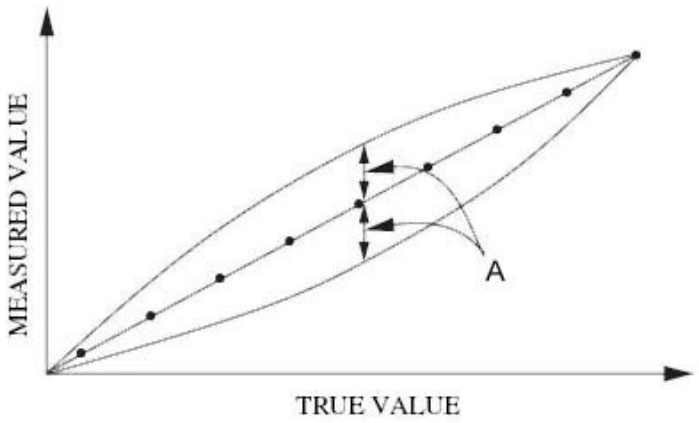

Key

A Error caused by non-linearity

FIG. 24 ILLUSTRATION OF NON-LINEAR ERROR

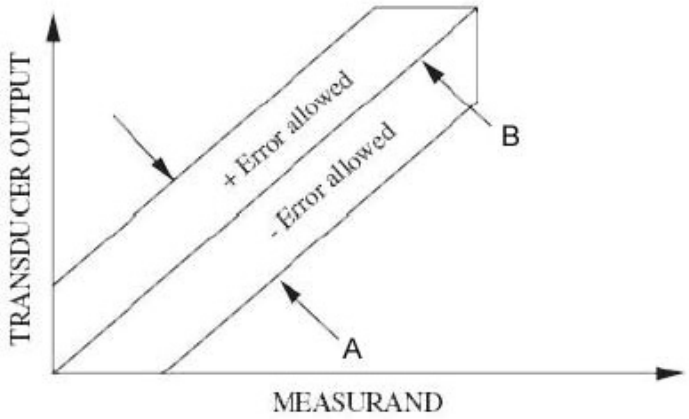

Key

A band of uncertainty from all defined sources

B best-fit straight line from which error is determined

FIG. 25 ILLUSTRATION OF ERROR BAND

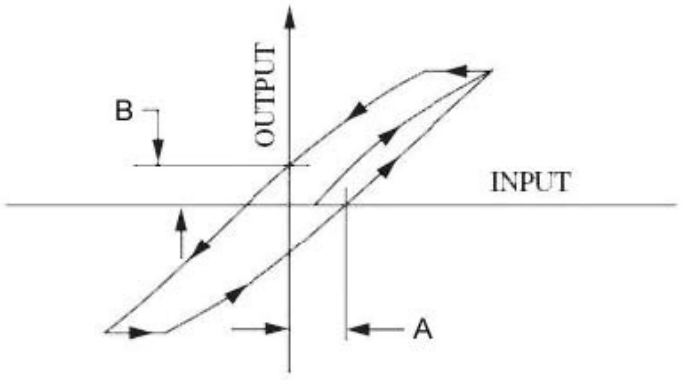

Key

A output hysteresis

B maximum input hysteresis

FIG. 26 ILLUSTRATION OF HYSTERESIS

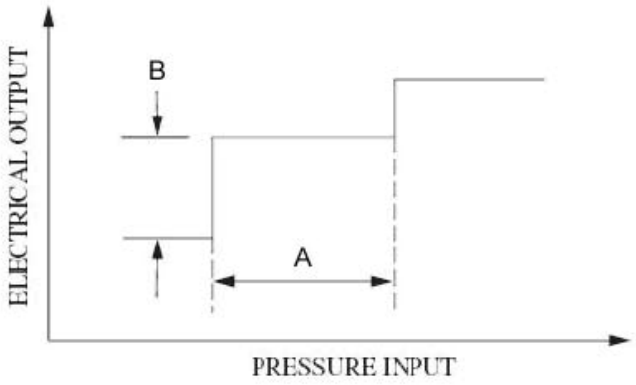

Key

A resolution

B minimum measurable difference in output

FIG. 27 ILLUSTRATION OF RESOLUTION

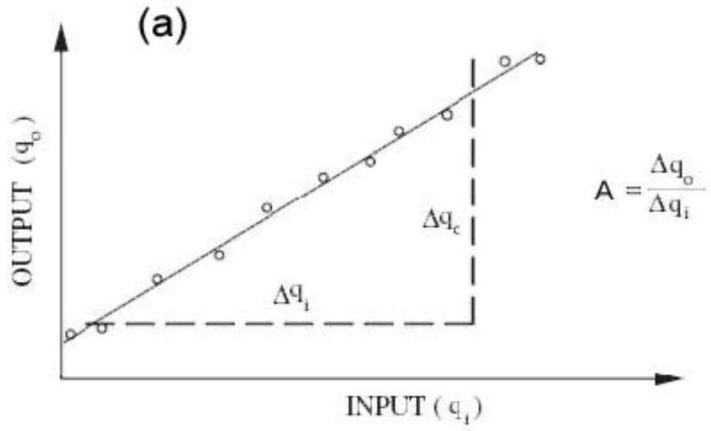

(a) Constant Sensitivity

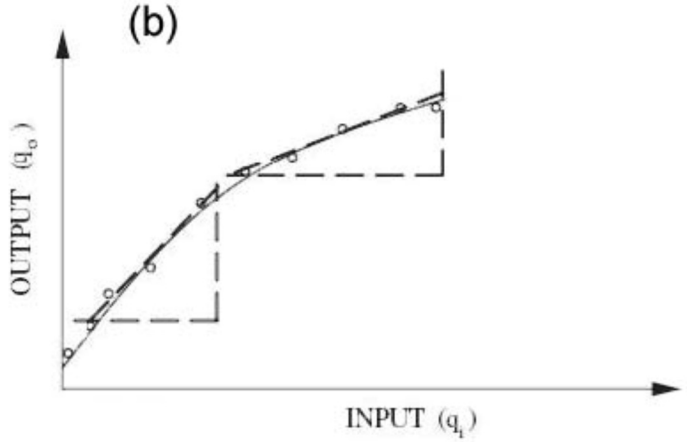

(b) Variable Sensitivity

Key

A sensitivity

q_o output

q_i input

FIG. 28 ILLLUSTRATION OF SENSITIVITY

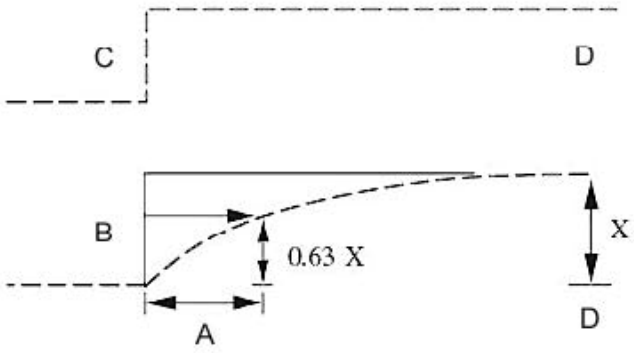

Key

A time constant
B electrical output
X final value
C pressure input
D time

FIG. 29 ILLUSTRATION OF TIME CONSTANT

between the drain or ground wire and each excitation and sensing lead. When resistance is not infinite, there is a short. Find open circuits by measuring the resistance across the excitation lead pair and the sensing lead pair. It should be equal to the resistance across the bridge to which the lead or excitation pair is attached, commonly about 100 Ω for metal strain gauge transducers and 1 000 to 5 000 Ω for silicon strain gauge transducers.

A-2.4 Grounding Problems

Excessive levels of noise in the data sometimes can be attributed to one or more loose ground wires. Securely attach ground wires to either a ground terminal on the data logger, or to a grounding rod. Take care to maintain only one ground in order to avoid problems with ground loops, which could result in considerable noise. In some applications, the pressure transducer and data logger are not grounded, in which case the installation is termed a floating system. In this situation, connect ground wires only to the ground terminal on the data logger.

A-2.5 Diaphragm Failure

Failure of the pressure transducer diaphragm commonly is caused by transmission of pressure waves through the water column, sometimes referred to as water hammer. Strong pressure waves can severely overpressure the transducer and rupture the diaphragm, resulting in sudden loss of data. The diaphragm also can fail if the transducer is dropped onto a hard surface, or if it is rapidly dropped to the water surface while lowering the device inside a well. Water freezing in the transducer can likewise rupture the diaphragm. Diaphragm failure requires replacing the transducer.

A-2.6 Power Supply Failure

An interruption of the power supply to most submersible pressure transducers will result in the output changing to zero or to the offset value entered into the data logger. The solution is to resupply power to the transducer. Commonly, if power to the data logger is lost, data already collected and stored in random access memory (RAM) in the data logger are lost. No additional data will be collected until power is restored and the data-collection program is re-entered. A partial remedy is to install a back-up data-storage device or to use a data logger with a non-volatile memory, to retain data already recorded as well as the data logger program. A charging system (solar or AC trickle) can help prevent power loss.

A-2.7 Data Logger Channel Failure

The internal circuitry in the data logger fails infrequently. However, this problem is difficult to diagnose because an open circuit in the wiring between the data logger and the transducer can have the same effect on the data. If a channel in the data logger fails, output values drift erratically. Occasionally, the data logger averages this erratic drift to a value similar to the expected value, making the failure difficult to notice. One solution is to reconnect the sensor to a different, but still functioning, channel on the data logger; another is to replace the data logger. Occasionally the problem is created by contaminants (such as, oil, water, or perspiration) that create shorts between data logger channels, in which case a solution is to disassemble and clean the wiring panel on the data logger.

The data logger's wiring panel also can become corroded after extended operation in humid conditions.

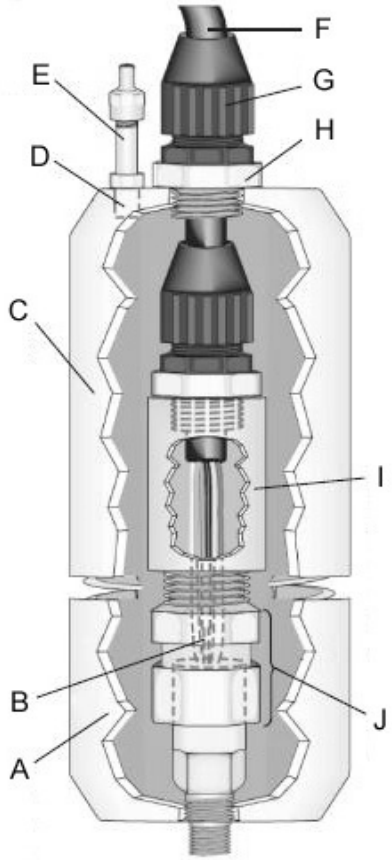

Key

- *A* PVC male adapter, slip bushings to 15 mm (1/2 inch), 15 to 8 mm (1/2 to 1/4 inch) female thread bushing installed backwards
- *B* If the transducer has an open vent tube, it is important to connect it directly to the vent tube in the cable or with tubing of about the same diameter to avoid a large-volume accumulator across which pressure changes would be attenuated.
- *C* PVC female adapter and slip bushings to 15 mm (1/2 inch) female threads
- *D* 8.334 mm (21/64 inch) hole drilled and tapped
- *E* valve for leak testing and final pressurization
- *F* vented cable to surface and datalogger
- *G* strain relief
- *H* 15 mm (1/2 inch) to 10 mm (3/8 inch) threaded bushing for 6 to 7 mm (0.125 to 0.275 inch) cable; about 10 wraps of polytetrafluoroethylene tape should be used for strain relief to female pipe joints
- *I* threaded 25 mm (1 inch) to 15 mm (1/2 inch) bell reducer for 25 mm (1 inch) transducer, 15 mm (1/2 inch) coupling for 18 mm (11/16 inch) transducer
- *J* ferrules for transducer

FIG. 30 PRESSURIZED HOUSING FOR PRESSURE TRANSDUCER

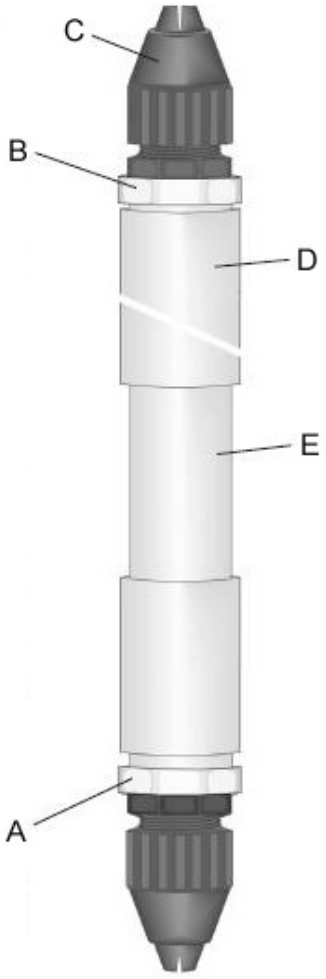

Key

- *A* 15 to 10 mm (1/2 to 3/8 inch) threaded bushing for 6 to 7 mm (0.125 to 0.275 inch) cable
- *B* 15 to 10 mm (1/2 to 3/8 inch) threaded bushing for 6 to 7 mm (0.125 to 0.275 inch) cable
- *C* strain release
- *D* 15 mm (1/2 inch) female adapter
- *E* 15 mm (1/2 inch) PVC pipe

NOTE — About 10 wraps of plumbing tape should be used between the strain relief and female pipe joints. The vent tube in the vented cable should be connected by tubing of about the same diameter to prevent the cavity from becoming a pressure accumulator.

FIG. 31 HOUSING FOR CABLE SPLICES

Corrosion can cause an intermittent open circuit between the wire and the wiring panel, causing intermittent periods of erroneous data. The solution requires cleaning the connections, and changing the environment in which the data logger is housed. Operation in a drier environment (for example, enclosing the data logger in a low-humidity container or frequently replacing the desiccant) prevents corrosion-related problems. Fumes released from a battery enclosed in the data logger's housing also can cause corrosion. To avoid this problem, house the battery in a separate location from the data logger.

A-2.8 Voltage Surges

Voltage surges (transients) can cause a multitude of problems, ranging from alteration of the data logger program or alteration of the data logger clock to complete failure of the data logger and pressure transducer. A transient current from a nearby lightning strike can corrupt data without harming either the data logger or the pressure transducer. One solution is to turn off the data logger, resupply power, and then re-enter the program, but proper grounding will solve most problems associated with transient voltage surges. A direct lightning strike, however, will probably destroy both data logger and the pressure transducer. Voltage surges coming through AC power lines or telephone lines can damage or destroy the transducer, the data logger and other connected electronic equipment. Surge protection devices usually are placed between these incoming lines and the data logger, but they are not normally used between the transducer and the data logger.

A-2.9 Faulty Shielding

Faulty shielding can allow electromagnetic coupling to corrupt the signal from the sensor to the data logger. Occasionally this is caused by cuts or kinks in the transducer cable, but more frequently by long, exposed, unshielded wire near the data logger. These long wires increase the signal noise sent to the data logger. One solution is to minimize the length of unshielded wire. A second solution is to change the program in the data logger to increase the signal or the excitation from the data logger, effectively increasing the signal-to-noise ratio. A third solution is to increase signal integration time during the measurement cycle.

A-2.10 Over-Range Problems

An over-range problem develops when the signal is increased beyond the anticipated maximum value. Many data loggers can be programmed to accept different ranges of sensor output. Sensor output rising beyond the anticipated maximum output programmed into the data logger creates an over-range situation. Over-range problems also can occur from submerging the pressure transducer too deeply (overpressuring), so that the transducer is subjected to pressures exceeding its maximum. Even if the pressure transducer is situated correctly, unexpected extreme water level rises can exceed the anticipated maximum value.

Occasionally data loggers are not capable of measuring the entire voltage range that a transducer can output, thereby reducing the range of water level measurements that can be sensed. Possible solutions are to reprogram the data logger to accept a wider range of output from the transducer or to program the data logger to simultaneously log output from the transducer on multiple input ranges during the same measurement scan. The later solution retains resolution while increasing the range of input signal.

Solutions to overpressure problems are to raise the pressure transducer or to use a different model of transducer capable of measuring a wider range of pressure fluctuations. In some cases, it may be possible to continue operating the transducer as long as the overpressure is not too extreme. When using this solution, the investigator should extend the calibration range to include these overpressure conditions.

ANNEX B

(*Clause* 5.12)

SALIENT FEATURES OF DIGITAL WATER LEVEL RECORDERS (DWLRs)

B-1 The DWLR unit, accessories to measure water level data at specified intervals and downloading data from DWLR site to uploading the same to office desktop should work in an integrated manner.

Sl No.	*Salient Features*	*Requirements*
i)	Pressure Sensor	
	Sensor type	Vented gauge pressure sensor
	Measuring range	0 - 70m (water column) For different ground water applications different overall accuracy is specified as follows: a) 0 - 25m (water column) : 25 mm or better b) 0 - 50m (water column) : 50 mm or better c) 0 - 70m (water column) : 70 mm or better
	Overall accuracy	0.1 percent full scale (including sensor and data logger). The pressure readings should be fully temperature and pressure compensated over the entire operating range
	Temperature coefficient	<0.01 percent full scale/degree centigrade (on water level reading)
	Reproducibility	0.05 percent full scale
	Long-term stability	0.1 percent full scale and ensure long-term stability without any field calibration requirements
	Burst pressure	>3 times of full scale
	Overload pressure (maximum pressure, sensor should sustain without effect on calibration upon return to rated measuring range)	2 times of full scale
	Over voltage protection	May be provided on power supply lines
ii)	Data Logger	
	Resolution of measurement	12-bit AD converter or better
	Measuring interval and measuring modes	1 minute one reading to 24h one reading as per need in linear sampling mode, should have selectable (i) linear, (ii) logarithmic, and (iii) event measuring modes
	Settling up time	< 30 min after submersion
	Recording capacity	Non-volatile flash data storage of more than 200 000 data points (minimum)
	Memory type	Non-volatile memory
	Power supply	Should be equipped with lithium or alkaline battery pack, in standard size, like AA, C or 0 size option of an external battery pack that can provide operational life more than 2 years may be preferred Batteries may be kept inside a separate enclosure, above the maximum water level or inside the data logger enclosure. However, they shall be easily replaceable
	Communication interface	The communication hardware between DWLR and Palmtop/Laptop PC shall be suitable for the specified cable lengths and communication.
	Built in clock	± 2 min/year
	Displayed time resolution	1 s
	Over voltage protection	Should include lightening, over voltage and surge protection

Sl No.	*Salient Features*	*Requirements*
iii)	Enclosure for Pressure Sensor and Data Logger	Data logger should be concealed into a single tubular enclosure which is waterproof and corrosion proof
	Dimensions	Outer diameter: < 50 mm, length <500 mm
	Material	Titanium or stainless steel and should be corrosion proof
	Operating temperature	Up to 50° C
	Humidity	100 percent
	Cable	The cable shall have following features a) Strength members for good longitudinal stability of cable b) Incorporated vent tube for barometric air pressure compensation of the vented gauge pressure sensors c) A moisture blocking system based on a hydrophobic filter and desiccator, to prevent condensation of water in the vent tube and in the sensor. The desiccant shall be replaceable d) The desiccant capacity should be adequate for atleast 6 months of unattended operations under the worst environmental conditions. For each instrument, two desiccant replacement should be part of the delivery e) Cable screen to be connected to the data logger ground terminal to minimize electrical interference f) A cable suspension bracket allowing the DWLR to be adjusted to the required depth, in a stable and reproducible manner g) The cable and contacts should be fixed or quick connect h) Corrosion and moisture free as the equipment has to work under water condition j) Cable should have good flexibility k) The electrical wires should have sufficient conductivity to allow for extension of the cable to up to 150 m without degrading accuracy, stability and data communication
iv)	Data Retrieval System (DRS)	Pocket PC/ Laptop
	Entry /Display/Readability	The unit should have a colour screen/display should be easily readable in field conditions
	Software	a) Windows based software for instrument control and display of downloaded data in tabular and graphical presentation form b) The DWLR should include a software for downloading data from DWLR and exporting the same to desktop PC in MS office formats
	Power supply	All batteries associated with the DRS, that is, the batteries for normal operation and the back-up batteries, should be easily replaceable by the local operator ideally using lithium or alkaline batteries

Bureau of Indian Standards

BIS is a statutory institution established under the *Bureau of Indian Standards Act*, 2016 to promote harmonious development of the activities of standardization, marking and quality certification of goods and attending to connected matters in the country.

Copyright

BIS has the copyright of all its publications. No part of these publications may be reproduced in any form without the prior permission in writing of BIS. This does not preclude the free use, in the course of implementing the standard, of necessary details, such as symbols and sizes, type or grade designations. Enquiries relating to copyright be addressed to the Director (Publications), BIS.

Review of Indian Standards

Amendments are issued to standards as the need arises on the basis of comments. Standards are also reviewed periodically; a standard along with amendments is reaffirmed when such review indicates that no changes are needed; if the review indicates that changes are needed, it is taken up for revision. Users of Indian Standards should ascertain that they are in possession of the latest amendments or edition by referring to the latest issue of 'BIS Catalogue' and 'Standards : Monthly Additions'.

This Indian Standard has been developed from Doc No.: WRD 03 (0505).

Amendments Issued Since Publication

Amend No.	Date of Issue	Text Affected

BUREAU OF INDIAN STANDARDS

Headquarters:

Manak Bhavan, 9 Bahadur Shah Zafar Marg, New Delhi 110002
Telephones : 2323 0131, 2323 3375, 2323 9402 *Website*: www.bis.org.in

Regional Offices: *Telephones*

Central : Manak Bhavan, 9 Bahadur Shah Zafar Marg, NEW DELHI 110002 — 2323 7617, 2323 3841

Eastern : 1/14 C.I.T. Scheme VII M, V. I. P. Road, Kankurgachi, KOLKATA 700054 — 2337 8499, 2337 8561, 2337 8626, 2337 9120

Northern : Plot No. 4-A, Sector 27-B, Madhya Marg, CHANDIGARH 160019 — 26 50206, 265 0290

Southern : C.I.T. Campus, IV Cross Road, CHENNAI 600113 — 2254 1216, 2254 1442, 2254 2519, 2254 2315

Western : Manakalaya, E9 MIDC, Marol, Andheri (East), MUMBAI 400093 — 2832 9295, 2832 7858, 2832 7891, 2832 7892

Branches: AHMEDABAD. BENGALURU. BHOPAL. BHUBANESWAR. COIMBATORE. DEHRADUN. DURGAPUR. FARIDABAD. GHAZIABAD. GUWAHATI. HYDERABAD. JAIPUR. JAMMU. JAMSHEDPUR. KOCHI. LUCKNOW. NAGPUR. PARWANOO. PATNA. PUNE. RAIPUR. RAJKOT. VISAKHAPATNAM.

Published by BIS, New Delhi